Department of Physics

Departmental Exam
Fall 2001

Exam & Solutions

ID Number _____ PART I Score _____

PHYSICS DEPARTMENTAL EXAM -- FALL 2001

SECTION 1:

Problem 1 [Classical Mechanics] A comet, barely unbound by the sun (its total energy vanishes), executes a parabolic orbit about it. At a certain time the comet is known to have a speed v and impact parameter b with respect to the sun. You may neglect the comet's mass m with respect to the sun's mass M. Find the perigee (distance of closest approach to the sun) of the comet.

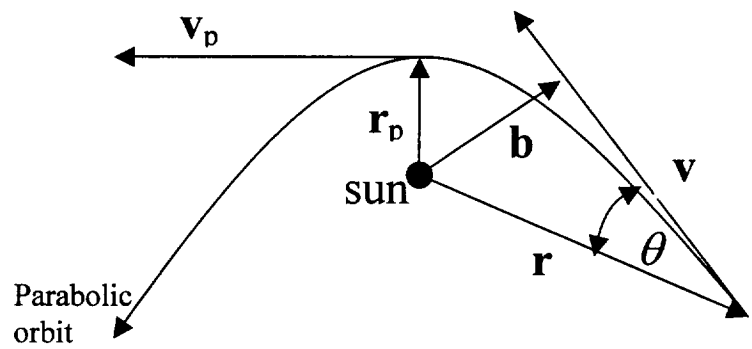

SOLUTION 1

ANGULAR MOMENTUM CONSERVATION:

INITIALLY $L = |\vec{r} \times \vec{p}| = mvr|\sin\theta| = mvb$

AT PERIGEE $L = mv_p r_p$

$\therefore v_p = vb/r_p$

ENERGY CONSERVATION: $KE + \frac{GMm}{r_p} \simeq 0$

$\therefore \frac{1}{2}mv_p^2 = \frac{GMm}{r_p}$

SUBSTITUTE FOR v_p: $\frac{v^2b^2}{2r_p^2} = \frac{GM}{r_p}$

HENCE: $r_p = \frac{v^2b^2}{2GM}$

ID Number _____ PART I Score _____

PHYSICS DEPARTMENTAL EXAM -- FALL 2001

SECTION 1:

Problem 2. [Classical Mechanics] Given a Hamiltonian $H = q_1 p_1 - q_2 p_2 + b q_2^2 - a q_1^2$, show that

$$F_1 = \frac{p_1 - a q_1}{q_2} \text{ and } F_2 = q_1 q_2$$

are constants of the motion. Are there any additional constants generated by Jacobi's identity?

SOLUTION

$$[H, F_1] = \sum_j \left\{ \frac{\partial H}{\partial q_j}\frac{\partial F_1}{\partial p_j} - \frac{\partial H}{\partial p_j}\frac{\partial F_1}{\partial q_j} \right\}$$

$$= \left\{ (p_1 - 2aq_1)\frac{1}{q_2} - q_1\left(\frac{-a}{q_2}\right) + (-p_2 + 2bq_2)\cdot 0 - (-q_2)\left(\frac{p_1 - aq_1}{-q_2^2}\right) \right\}$$

$$= 0$$

$$[H, F_2] = \sum_j \left(\frac{\partial H}{\partial q_j}\frac{\partial F_2}{\partial p_j} - \frac{\partial H}{\partial p_j}\frac{\partial F_2}{\partial q_j} \right)$$

$$= \left\{ (p_1 - 2aq_1)\cdot 0 - q_1 q_2 + (-p_2 + 2bq_2)\cdot 0 - (-q_2)q_1 \right\}$$

$$= 0$$

$$[F_1, F_2] = \sum_j \left(\frac{\partial F_1}{\partial q_j}\frac{\partial F_2}{\partial p_j} - \frac{\partial F_1}{\partial p_j}\frac{\partial F_2}{\partial q_j} \right)$$

$$= \left\{ -\frac{a}{q_2}\cdot 0 - \frac{1}{q_2}q_2 + \left(\frac{p_1 - aq_1}{-q_2^2}\right)\cdot 0 - 0\cdot q_1 \right\}$$

$$= -1$$

$\therefore$ NO ADDITIONAL CONSTANTS.

ID Number _____ PART I Score _____

PHYSICS DEPARTMENTAL EXAM -- FALL 2001

SECTION 2:

Problem 3. [Electromagnetism] The metal bottom and piston of an airtight cylinder with insulating walls form the plates of a parallel-plate capacitor. If the separation and pressure are initially d_0 and p_0 respectively, when the capacitor is uncharged, show that the fractional decrease in the plate separation f, when a potential difference V is applied, is given in SI units by

$$f(1-f) = \frac{\varepsilon_0}{2p_0}\left(\frac{V}{d_0}\right)^2$$

SOLUTION

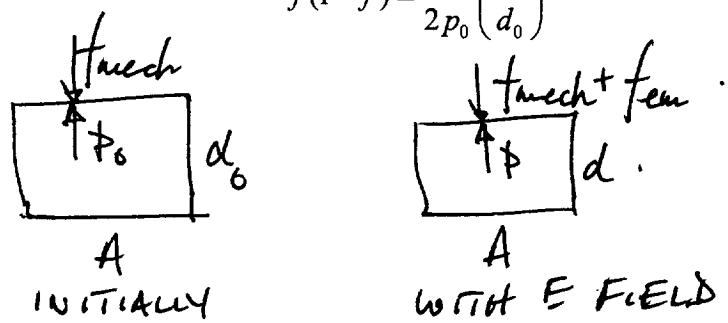

BALANCING FORCE/AREA :

$$p_0 + f_{em} = p$$

WHERE : $f_{em} = \mu_e = \frac{\epsilon_0}{2}E^2 = \frac{\epsilon_0}{2}\left(\frac{V}{d}\right)^2$

AND $pV = pAd = p_0V_0 = p_0Ad_0$

$$\therefore p = \frac{p_0 d_0}{d} = \frac{p_0}{f} \quad \text{WITH } f = \frac{d}{d_0}.$$

$$\therefore \frac{\epsilon_0}{2}\left(\frac{V}{fd_0}\right)^2 = p_0\left(\frac{1}{f} - f\right)$$

OR $f(1-f) = \frac{\epsilon_0}{2p_0}\left(\frac{V}{d_0}\right)^2$.

ID Number _____ PART I Score _____

PHYSICS DEPARTMENTAL EXAM -- FALL 2001

SECTION 2:

PROBLEM 4. [Electomagnetism] A dipole **p** is situated a distance *d* above an infinite grounded conducting plane. The dipole makes an angle θ with the perpendicular to the plane. Using the method of images find the potential that satisfies the stated boundary conditions. Derive an expression for the torque on **p**. If the dipole is free to rotate, in what orientation will it come to rest?

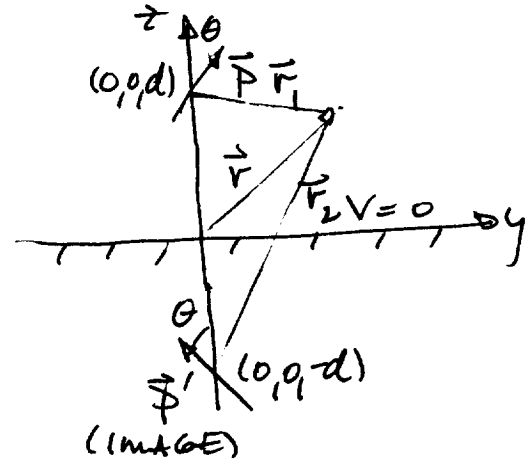

SOLUTION

$$\vec{p} = p\cos\theta\,\hat{z} + p\sin\theta\,\hat{y}$$

PLACE IMAGE AT $(0,0,-d)$, WITH ORIENTATION:

$$\vec{p}\,' = p\cos\theta\,\hat{z} - p\sin\theta\,\hat{y}$$

THEN:

$$V(\vec{r}) = \frac{1}{4\pi\epsilon_0}\left\{\frac{\vec{p}\cdot\vec{r}_1}{r_1^3} + \frac{\vec{p}\,'\cdot\vec{r}_2}{r_2^3}\right\}$$

$$= \frac{1}{4\pi\epsilon_0}\left\{\frac{py\sin\theta + p(z-d)\cos\theta}{[x^2+y^2+(z-d)^2]^{3/2}} + \frac{-py\sin\theta + p(z+d)\cos\theta}{[x^2+y^2+(z+d)^2]^{3/2}}\right\}$$

CHECK SOLUTION AT $z=0$:

$$V(x,y,z=0) = \frac{1}{4\pi\epsilon_0}\left\{py\sin\theta - dp\cos\theta - py\sin\theta + dp\cos\theta\right\}/(x^2+y^2+d^2)^{3/2}$$

$= 0$ AS REQUIRED.

TORQUE IS: $\vec{\tau} = \vec{p}\times\vec{E}'\Big|_{(0,0,d)}$ WHERE $\vec{E}'$ = IMAGE FIELD

$$E'_x = -\frac{\partial V_2}{\partial x} = \frac{3}{2}\frac{p}{4\pi\epsilon_0}\left\{\frac{(-y\sin\theta + (z+d)\cos\theta)\,2x}{(x^2+y^2+(z+d)^2)^{5/2}}\right\}\Bigg|_{0,0,d} = 0.$$

$$E'_y = -\frac{\partial V_2'}{\partial y} = \frac{p}{4\pi\epsilon_0}\left\{\frac{\sin\theta}{[x^2+y^2+(z+d)^2]^{3/2}} - \frac{3}{2}\cdot 2y\frac{(-y\sin\theta + (z+d)\cos\theta)}{[x^2+y^2+(z+d)^2]^{5/2}}\right\}$$

$$= p\sin\theta/4\pi\epsilon_0(2d)^3 \quad \text{AT } (0,0,d)$$

PROB. 4 SOL'N CONTINUED.

$$E'_z = -\frac{\partial V_2}{\partial z} = \frac{p}{4\pi\epsilon_0}\left\{\frac{-\cos\theta}{[x^2+y^2+(z+d)^2]^{3/2}} + \frac{3}{2}\frac{(-y\sin\theta+(z+d)\cos\theta)}{[x^2+y^2+(z+d)^2]^{5/2}}\,2(z+d)\right\}$$

$$= \frac{2p\cos\theta}{4\pi\epsilon_0(2d)^3} \quad \text{AT } (0,0,d)$$

$$\therefore \vec{\tau} = p(\cos\theta\,\hat{z} + \sin\theta\,\hat{y})\times(\sin\theta\,\hat{y} + 2\cos\theta\,\hat{z})\frac{p}{4\pi\epsilon_0(2d)^3}$$

$$= (-c_\theta s_\theta + 2s_\theta c_\theta)\frac{p^2}{4\pi\epsilon_0(2d)^3}\,\hat{x}$$

OR $\vec{\tau} = \dfrac{p^2\cos\theta\sin\theta}{32\pi\epsilon_0 d^3}\,\hat{x}$, IE. $\vec{p}$ TURNS TOWARD $\theta = 0$, A STABLE EQUILIBRIUM SINCE $\dfrac{\partial\tau}{\partial\theta} > 0$.

ID Number _____ **PART I** **Score** _____

PHYSICS DEPARTMENTAL EXAM -- FALL 2001

SECTION 3:

PROBLEM 5: [Thermodynamics] Four moles of methane gas (chemical formula CH_4) are driven along the reversible cycle depicted below. Process AB is an isotherm at temperature T_A = 300K; BC is an adiabat; CD an isobar; and DA an isochore. The volumes at A, B, and C are V_A = 1.00 L, V_B = 5.00 L, and V_C = 7.00 L. Compute the pressure p_B at B, the pressure p_C at C, and the total work W done per cycle.

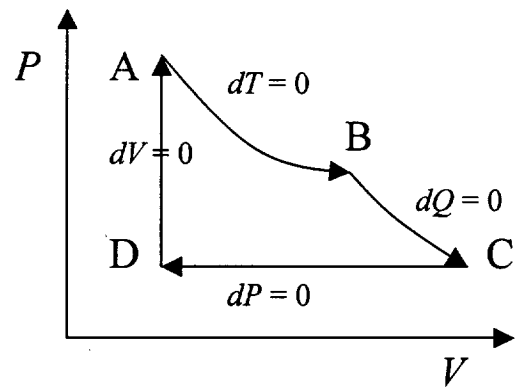

PROBLEM 5

DAN AROVAS.

Solution

To compute p_B, use the ideal gas law:

$$\begin{aligned} p_B &= \frac{nRT_B}{V_B} \\ &= \frac{(4\,\text{mol})\cdot(8.314\,\text{J/mol}\cdot\text{K})\cdot(300\,\text{K})}{5.00\times10^{-3}\,\text{m}^3} \\ &= 2.00\times10^6\,\text{Pa}\ . \end{aligned}$$

To find p_C, use the adiabatic equation of state $d(pV^\gamma)=0$. For a polyatomic gas, $\gamma=\frac{4}{3}$. Thus,

$$\begin{aligned} p_C &= p_B\cdot(V_B/V_C)^\gamma \\ &= (2.00\times10^6\,\text{Pa})\cdot(\tfrac{5}{7})^{\frac{4}{3}} \\ &= 1.27\times10^6\,\text{Pa}\ . \end{aligned}$$

To find the work done per cycle, we add the contributions from the individual legs:

$$W = W_{AB}+W_{BC}+W_{CD}+W_{DA}\ .$$

Compute each of these in turn:

$$\begin{aligned} W_{AB} &= \int_A^B p\,dV = nRT_A\int_A^B\frac{dV}{V} = nRT_A\ln\left(\frac{V_A}{V_B}\right) \\ W_{BC} &= E_B-E_C = \frac{p_BV_B-p_CV_C}{\gamma-1} = \frac{nRT_A}{\gamma-1}\cdot\left\{1-\left(\frac{V_B}{V_C}\right)^{\gamma-1}\right\} \\ W_{CD} &= \int_C^D p\,dV = p_C(V_D-V_C) = nRT_A\cdot\left(\frac{V_A}{V_C}-1\right)\cdot\left(\frac{V_B}{V_C}\right)^{\gamma-1} \\ W_{DA} &= 0 \end{aligned}$$

Note that we used the First Law in computing W_{BC}. Thus, we find

$$\begin{aligned} W &= nRT_A\cdot\left\{\ln\left(\frac{V_B}{V_A}\right)+\frac{1-(V_B/V_C)^{\gamma-1}}{\gamma-1}+\left(\frac{V_A}{V_C}-1\right)\cdot\left(\frac{V_B}{V_C}\right)^{\gamma-1}\right\} \\ &= (4\,\text{mol})\cdot(8.314\,\text{J/mol}\cdot\text{K})\cdot(300\,\text{K})\cdot\left\{\ln5+\frac{1-(\frac{5}{7})^{\frac{1}{3}}}{\frac{1}{3}}+(\tfrac{1}{7}-1)\cdot(\tfrac{5}{7})^{\frac{1}{3}}\right\} \\ &= 11.6\,\text{kJ}\ . \end{aligned}$$

ID Number _____ **PART I** **Score** _____

PHYSICS DEPARTMENTAL EXAM -- FALL 2001

SECTION 3:

PROBLEM 6: [Statistical Mechanics/Quantum Mechanics] A large number of N identical spin 1/2 particles, each of mass m, are bound in a spherical region with volume V. Assume that these particles are mutually non-interacting, except for the "collective" potential which binds them in V. Approximate the single particle wave functions as plane waves, and assume that the particles are non-relativistic. What is the mean squared speed of the particles when this system is in its ground state?

PROBLEM #6, SOLUTION

GEORGE FULLER

$$N = \tfrac{4}{3}\pi R^3 n$$

$$n = \frac{N}{V} = 2\int_0^{p_f} \frac{d^3p}{(2\pi\hbar)^3}$$

$$n = \frac{2\,4\pi}{(2\pi\hbar)^3}\,\tfrac{1}{3}\,p_f^3 = \frac{1}{3\pi^2}\,k_f^3 = \frac{1}{3\pi^2\hbar^3}\,p_f^3$$

$$p_f = \left(\frac{3\pi^2\hbar^3 N}{V}\right)^{1/3} = \hbar\left(\frac{3\pi^2 N}{V}\right)^{1/3}$$

$$E_f = \frac{p_f^2}{2m} = \frac{\hbar^2}{2m}\left(\frac{3\pi^2 N}{V}\right)^{2/3}$$

average energy $\Rightarrow \langle E\rangle = \dfrac{2\int_0^{p_f} \frac{d^3p}{(2\pi\hbar)^3}\,E(p)}{2\int_0^{p_f} \frac{d^3p}{(2\pi\hbar)^3}}$

$E(p) = p^2/2m$

$$\langle E\rangle = \frac{1}{2m}\,\frac{\int_0^{p_f} p^4\,dp}{\int_0^{p_f} p^2\,dp} = \frac{1}{2m}\,\frac{\frac{1}{5}p_f^5}{\frac{1}{3}p_f^3} = \frac{3}{5}\left(\frac{p_f^2}{2m}\right) = \frac{3}{5}E_f$$

$$\tfrac{1}{2}m\bar{v}^2 = \tfrac{3}{5}E_f$$

$$\bar{v}^2 = \frac{6}{5}\frac{E_f}{m} = \frac{6}{5}\left(\frac{\hbar^2}{2m^2}\left(\frac{3\pi^2 N}{V}\right)^{2/3}\right)$$

$$= \frac{3\hbar^2}{5m^2}\left(\frac{3\pi^2 N}{V}\right)^{2/3}$$

ID Number _____ **PART I** **Score** _____

PHYSICS DEPARTMENTAL EXAM -- FALL 2001

SECTION 4:

Problem 7. [Quantum Mechanics] A one-dimensional system is described by a wave function $\psi(x) = \int dk\, A(k) e^{ikx}$, where k is an integration variable and $A(k)$ are scalars. In terms of $A(k)$:

a) Calculate the expectation value for the system's momentum p;

b) Calculate the variance of p. Remember $\sigma^2 = \langle p^2 \rangle - \langle p \rangle^2$;

c) Calculate the probability distribution for the position x.

A measurement of the position x is made and a value $x = a$ results.

d) Calculate the expectation value for the system's momentum p;

e) Calculate the variance of p;

Explain the results from a) – e) in terms of compatible operators, uncertainty relations, collapse of the wave function and all that.

SOLUTION

(3) a) $\langle p \rangle = \int dx\, \psi^*(x) \frac{\hbar}{i} \frac{\partial}{\partial x} \psi(x) = \int dx\, \psi^*(x) \frac{\hbar}{i} \frac{\partial}{\partial x} \int A(k) e^{ikx} dk$

$= \int dk\, A(k) \hbar k \underbrace{\int dx\, \psi^*(x) e^{ikx}}_{= A^*(k)}$

(I did not require it for full credit) really need to normalize $\int dk\, A(k) \hbar k A^*(k) = \int dk\, \hbar k |A(k)|^2$

(1) b) $\langle p^2 \rangle = \int dk\, \hbar^2 k^2 |A(k)|^2$ likewise, with $\sigma^2 = \langle p^2 \rangle - \langle p \rangle^2$

(2) c) $P(x) = |\psi(x)|^2 = \int dk' \int dk\, A^*(k') A(k) e^{i(k-k')x}$

d) $A(k) = \frac{1}{2\pi} \int dx\, \delta(x-a) e^{-ikx} = \frac{e^{-ika}}{2\pi}$

(3) $\therefore \langle p \rangle = \frac{1}{4\pi} \int dk\, \hbar k = 0$

e) $\langle p^2 \rangle = \int dk\, \hbar^2 k^2 \longrightarrow \infty \quad \therefore \sigma \longrightarrow \infty$.

(1)

ID Number _____ **PART I** **Score** _____

PHYSICS DEPARTMENTAL EXAM -- FALL 2001

SECTION 4:

Problem 8: [Quantum Mechanics] A positronium atom is in the $1S$ state with an external magnetic field **B** along the **z**-axis. Assume that its Hamiltonian is

$$H = A\mathbf{S}_1 \cdot \mathbf{S}_2 + \mathbf{\Lambda} \cdot (\mathbf{S}_1 - \mathbf{S}_2) = H_0 + \lambda H_1$$

with

$$\mathbf{\Lambda} = \frac{e\mathbf{B}}{mc}$$

The subscripts 1 and 2 label the electron and positron respectively, A is a constant, and m is the reduced mass. The term λH_1 is small relative to the term H_0.

a) What are the eigenvalues and eigenstates of H_0? Is there degeneracy?
b) Use first order perturbation theory to calculate the eigenvalues and eigenstates of H.

PROBLEM #8

a) $H_0 = A\vec{S}_1\cdot\vec{S}_2 = \frac{A}{2}(\vec{S}^2 - \vec{S}_1^2 - \vec{S}_2^2)$

Eigenvalues are $\frac{A\hbar^2}{2}\left[S(S+1) - \frac{1}{2}\left(\frac{3}{2}\right) - \frac{1}{2}\left(\frac{3}{2}\right)\right] = \frac{A\hbar^2}{4}\begin{cases} 1 & \text{for } S=1 \\ -3 & \text{for } S=0 \end{cases}$

for states $|S\, S_z\, s_1\, s_2\rangle$

$\therefore$ $\left.\begin{array}{l} |1\,1\,\tfrac{1}{2}\,\tfrac{1}{2}\rangle \\ |1\,0\,\tfrac{1}{2}\,\tfrac{1}{2}\rangle \\ |1\,-1\,\tfrac{1}{2}\,\tfrac{1}{2}\rangle \end{array}\right\}$ are eigenstates with $E = A\hbar^2/4$ (3-fold degenerate)

$|0\,0\,\tfrac{1}{2}\,\tfrac{1}{2}\rangle$ is eigenstate with $E = -\frac{3A\hbar^2}{4}$.

b) $H_1 = \frac{e\vec{B}}{mc}\cdot(\vec{S}_1 - \vec{S}_2) = \frac{eB}{mc}(S_{1z} - S_{2z})$

Original basis can be re-expressed as:

$|1\,\phi\rangle = |\tfrac{1}{2}\,\tfrac{1}{2}\rangle \quad (= |S_{1z}\, S_{2z}\rangle) \qquad \uparrow\uparrow$

$|1\,0\rangle = \frac{1}{\sqrt{2}}\left(|\tfrac{1}{2}\,-\tfrac{1}{2}\rangle + |-\tfrac{1}{2}\,\tfrac{1}{2}\rangle\right). \qquad \uparrow\downarrow + \downarrow\uparrow$

$|1\,-1\rangle = |-\tfrac{1}{2}\,-\tfrac{1}{2}\rangle \qquad \downarrow\downarrow$

$|0\,0\rangle = \frac{1}{\sqrt{2}}\left(|\tfrac{1}{2}\,-\tfrac{1}{2}\rangle - |-\tfrac{1}{2}\,\tfrac{1}{2}\rangle\right) \qquad \uparrow\downarrow - \downarrow\uparrow$

Matrix elements of H_1 are: $\langle S\, S_z|\frac{eB}{mc}(S_{1z} - S_{2z})|S\, S_z\rangle$:

(or argue physically)

$\langle 1\,1|H_1|1\,1\rangle = 0$

$\langle 1\,1|H_1|1\,0\rangle = \frac{eB}{mc}\langle 1\,1|S_{1z} - S_{2z}|\left\{\frac{1}{\sqrt{2}}|\tfrac{1}{2}\,-\tfrac{1}{2}\rangle + |-\tfrac{1}{2}\,+\tfrac{1}{2}\rangle\right\}$

$= \frac{e\hbar B}{mc}\langle 1\,1|0\,0\rangle = 0$

$\langle 1\,1|H_1|1\,-1\rangle = 0$

$\langle 1\,1|H_1|0\,0\rangle = \frac{eB}{mc}\langle 1\,1|S_{1z} - S_{2z}|\left\{\frac{1}{\sqrt{2}}|\tfrac{1}{2}\,-\tfrac{1}{2}\rangle - |-\tfrac{1}{2}\,+\tfrac{1}{2}\rangle\right\}$

$= \frac{e\hbar B}{mc}\langle 1\,1|1\,0\rangle = 0$.

$\langle 1\,0|H_1|1\,0\rangle = \frac{e\hbar B}{mc}\langle 1\,0|0\,0\rangle = 0$

$\langle 1\,0|H_1|1\,-1\rangle = 0$

$$\langle 10|H_1|00\rangle = \frac{e\hbar B}{mc}\langle 10|10\rangle = \frac{e\hbar B}{mc}$$

$$\langle 1-1|H_1|00\rangle = 0 = \langle 1-1|H_1|1-1\rangle$$

$$\langle 00|H_1|00\rangle = 0 .$$

Need to diagonalize 2x2 submatrix of $|10\rangle, |00\rangle$ with non-zero off-diagonal elements; $\therefore$

$$\det\begin{pmatrix} A\hbar^2/4 - E & e\hbar B/mc \\ e\hbar B/mc & -3A\hbar^2/4 - E \end{pmatrix} = 0$$

or, $$E^2 + \left(\frac{3A}{4} - \frac{A}{4}\right)\hbar^2 E - \frac{3A^2\hbar^4}{16} = \left(\frac{e\hbar B}{mc}\right)^2$$

$$\left(E + \frac{A\hbar^2}{4}\right)^2 = E^2 + \frac{A\hbar^2}{2}E + \frac{A^2\hbar^4}{16} = \left(\frac{e\hbar B}{mc}\right)^2 + \frac{A^2\hbar^4}{4}$$

Eigenstates are: $$E = -\frac{A\hbar^2}{4} \pm \sqrt{\left(\frac{e\hbar B}{mc}\right)^2 + \left(\frac{A\hbar^2}{2}\right)^2}$$

($|1\,1\rangle$ and $|1\,-1\rangle$ remain at $E = A\hbar^2/4$)

Eigenstates are solutions to: $$\begin{pmatrix} A\hbar^2/4 - E & e\hbar B/mc \\ e\hbar B/mc & -3A\hbar^2/4 - E \end{pmatrix}\begin{pmatrix} \alpha_1 \\ \alpha_2 \end{pmatrix} = 0$$

with $\alpha_1^2 + \alpha_2^2 = 1$.

$$\therefore \left[\frac{A\hbar^2}{4} + \frac{A\hbar^2}{4} \mp \sqrt{\left(\frac{e\hbar B}{mc}\right)^2 + \left(\frac{A\hbar^2}{2}\right)^2}\right]\alpha_1 + \left[\frac{e\hbar B}{mc}\right]\alpha_2 = 0$$

or $$\alpha_2 = \frac{\frac{A\hbar^2}{2} \mp \sqrt{\left(\frac{e\hbar B}{mc}\right)^2 + \left(\frac{A\hbar^2}{2}\right)^2}}{(e\hbar B/mc)}$$

with eigenstates $\alpha_1|10\rangle + \alpha_2|00\rangle$.

ID Number _____ **PART I** **Score** _____

PHYSICS DEPARTMENTAL EXAM -- FALL 2001

SECTION 5:

Problem 9: [Experiment] A length of wire appears to be made of steel and you are asked to confirm this by measuring the density. You do this by hanging weights from it until it vibrates in its fundamental mode at 440 Hz (you have perfect pitch so that you do not need a frequency counter). You are given a micrometer and find that the wire is 0.5 mm in diameter. Estimate the mass of the weight that will be required if you use a piece of the wire that is 30 cm long.

Author Goodkind
~~(NOT USED)~~

PROBLEM #9

SOLUTION

2) A length of wire appears to be made of steel and you are asked to confirm this by measuring its density. You do this by hanging weights from it until it vibrates in its fundamental mode at 440 Hz (you have perfect pitch so that you do not need a frequency counter). You are given a micrometer and find that the wire is 0.5 mm in diameter. Estimate the mass of the weight that will be required if you use a piece of the wire that is 30 cm long.

Answer: The velocity of a wave on a stretched string is $c = \sqrt{\frac{T}{\rho}}$ where T is the tension and ρ is the mass per unit length of the string. (If not remembered this should take no more than 5 minutes to work out.) The fundamental mode is when the length of the string is 1/2 wavelength so that the frequency is $f = 2c/\lambda$ and the tension must be

$$T = \rho(\lambda f/2)^2$$

The density of steel is 7.8 g/cm^3 (most common metals are about 8 g/cc) so that the mass per unit length is 1.5×10^{-2} g/cm and $T = 6.5\times10^5$ dynes or a mass of about .7 kg.

ID Number _____ PART I Score _____

PHYSICS DEPARTMENTAL EXAM -- FALL 2001

SECTION 5:

Problem 10: [Experiment] A photodiode has a characteristic output current versus voltage drop (I-V) relation given by $I = I_0(e^{eV/kT} - 1) - I_{\text{light}}$, where the first term is the usual diode relation (I_0 denoting the reverse bias current, e the electronic charge, and kT the thermal energy) and the second term corresponds to the light induced current.

a) Suppose we connect the diode to a resistor, as shown below, and measure the voltage drop V with an ideal voltmeter. Assume that the internal resistance of the photodiode is infinite. What is the constraint on R in order to insure an approximately linear measure of the light, i.e., to insure that $V = IR \approx I_{\text{light}}R$?

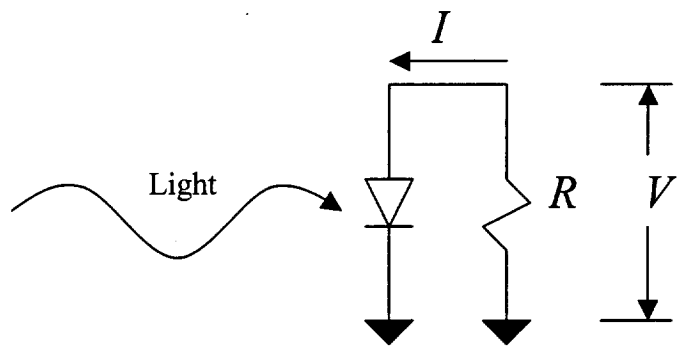

b) Suppose that, instead of connecting the diode directly to a resistor, we use a current to voltage converter as shown for the op-amp configuration below. Assume that the response for the op-amp can be taken as $V_0 = A(V_+ - V_-)$ and that the impedance of the inputs V_+ and V_- are infinite. What is the relation between V_0 and the input current? What happens as $A \to \infty$?

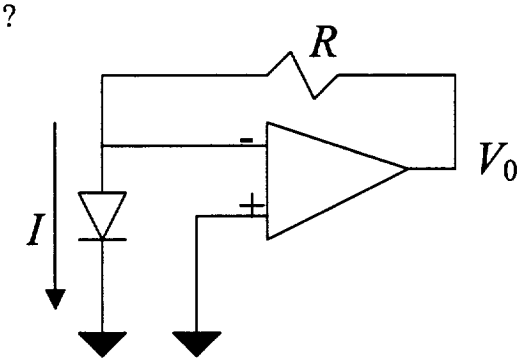

c) What, if any, is the constraint on R in the op-amp/photodiode circuit in order to insure an approximately linear measure of the light, i.e., to insure $V \propto I_{\text{light}}$ (Hint: think of what resistance the input sees)? What happens as $A \to \infty$?

SOLUTIONS: a, b, c CORRESPOND TO 1, 2, 3 (4-9 NOT USED)

Author: KLEINFELD

PROBLEM #10 (1-3 ONLY)

This is a problem in electronics that is concerned with the measurement of light with a photodiode. The I-V (output current versus voltage drop) relation for this device is:

$$I = I_0 (e^{eV/kT} - 1) - I_{light}$$

where the first term is the usual diode relation (I_0 denoted the reverse bias current, e denotes the electronic charge and kT corresponds to the thermal energy) and the second term corresponds to the light induced current.

1. Suppose we connect the diode to a resistor, as shown below, and measure the voltage drop, V, with an ideal voltmeter. Assume that the internal resistance of the photodiode is infinite.

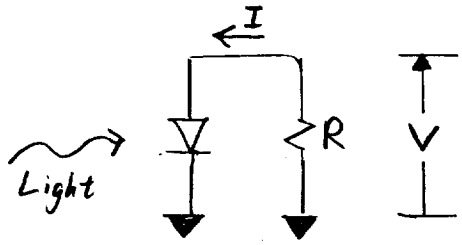

What is the constraint on R in order to insure an approximately linear measure of the light, i.e., to insure that $V = I R \approx RI_{light.}$

2. Suppose that, instead of connecting the diode directly to a resistor, you use a current to voltage converter as shown for the op-amp configuration below: Note that the equation for the op-amp may be taken as $V_0 = A (V_+ - V_-)$ and that the impedance of the inputs V_+ and V_- may be taken as infinite.

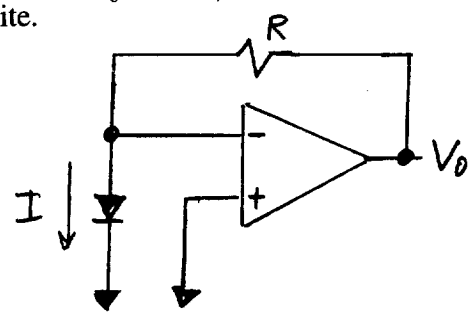

What is the relation between V_0 and the input current? What happens as $A \to \infty$?

3. What, if any, is the constraint on R in the op-amp/photodiode circuit in order to insure an approximately linear measure of the light, i.e., to insure that $V \propto I_{light.}$ (Hint: think of what resistance the input sees)? What happens as $A \to \infty$?

4. Suppose that the photocurrents that you wish to measure only have a frequency content up to a value f_0. How might you add a capacitor to the circuit in parts 2 and 3 so that the op-amp/photodiode circuit has a similar frequency response (sketch the circuit)?

5. What would be the value of the capacitor, denoted C, that you would use with your scheme?

6. The resistor in the circuit of parts 2 and 3 adds a Johnson noise whose variance, δI^2, has the form $\delta I_1^2 = 4\ kT\ \Delta\nu\ /\ R$, where $\Delta\nu$ is the frequency bandwidth. Further, the photocurrent has a variance due to the shot effect of the form $\delta I_2^2 = 2\ e\ I_{light}\ \Delta\nu$. These variances may be modeled as additional current sources, as shown below (we assume here that the op-amp *per se* generates no noise).

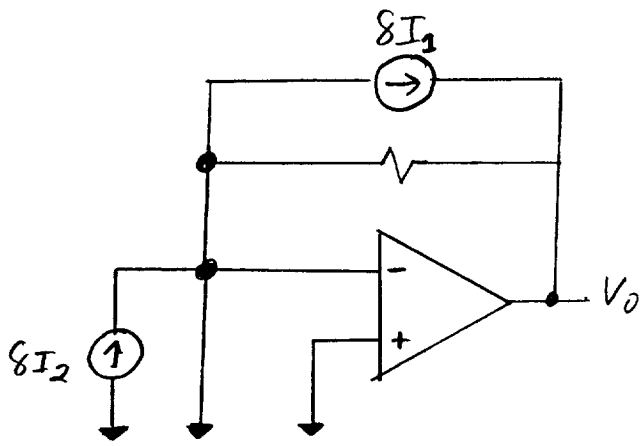

Derive an expression for the measured variance in the output voltage, i.e., δV_0^2 (hint: variances add). Assume that $A \rightarrow \infty$ for simplicity.

7. What is the constraint on the value of R to insure that only the shot-effect contributes to the noise? Assume that $A \rightarrow \infty$ for simplicity.

8. What is the ratio of signal current to noise current when only the shot effect dominates (hint: the answer to this part does not depend on that for part 7)?

9. Assuming that you answered parts 4 and 5 correctly, what is the approximate relation between $\Delta\nu$ and R and C?

1. $V = -IR$

$$'' = \underbrace{-I_0 R\left(e^{eV/kT}-1\right)}_{\#1} + \underbrace{I_{Light} R}_{\#2}$$

Want #1 << #2 so that $V \simeq I_{Light} R$ to 1st approx.

$$\therefore I_0 R\left(1+\frac{eV}{kT}+\cdots-1\right) << I_{Light} R \simeq V$$

or $\dfrac{I_0 R e V}{kT} << V$

or $R << \dfrac{kT}{e}/I_0$.

2. $I = \dfrac{V_0 - V_-}{R}$ and $V_0 = -AV_-$

$\therefore V_0 = \dfrac{IR}{1+1/A}$ (Note sign convention in Fig.).

As $A \to \infty$ $V_0 \to IR$.

3. Want input resistance to satisfy relation in part 1, i.e.,

$$R_{input} << \frac{kT}{e}/I_0$$

Input resistance is $R_{input} = \dfrac{V_-}{-I} = \dfrac{-V_0}{A(-I)} = \dfrac{V_0}{AI}$

But, using result from (2), $R_{input} = \dfrac{IR}{1+1/A}\cdot\dfrac{1}{AI} = \dfrac{R}{1+A}$

$\therefore$ Constraint is $\dfrac{R}{1+A} << \dfrac{kT}{e}/I_0$ or $R << (1+A)\dfrac{kT}{e}/I_0$

As $A \to \infty$, $R << A\dfrac{kT}{e}/I_0$ or, R can be any value.

4. Replace resistor with parallel R-C

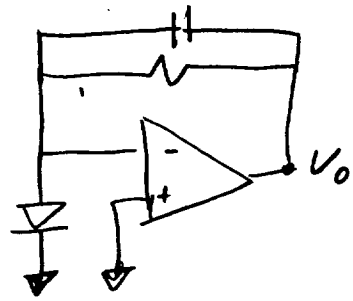

Parallel combination is resistive at low freq, capacitive at high freq, so that

5. $$\tilde{V}_o(f) = \frac{I\,Z(f)}{1+1/A} \qquad \text{where } Z(f) = \frac{R/i2\pi fC}{R + 1/i2\pi fC}$$

$$'' = \frac{R}{1+i2\pi fRC}$$

$$\therefore\ |\tilde{V}_o(f)| = \frac{IR}{|1+i2\pi fRC|} = \frac{IR}{\sqrt{1+(2\pi fRC)}}$$

$$\therefore\ C = \frac{1}{2\pi f_0 R}$$

6. Using the result of part 2, the total noise variance is

$$\delta V^2 = \delta V_1^2 + \delta V_2^2 = (R\,\delta I_1)^2 + (R\,\delta I_2^2)$$

$$'' = R^2 \frac{4KT}{R}\Delta\nu + R^2\, 2eI_L\Delta\nu$$

$$'' = 4KTR\Delta\nu + 2eI_L R^2\Delta\nu$$

7. Want $2eIR^2\Delta\nu \gg 4KTR\Delta\nu$

$$R \gg \frac{KT}{e}\frac{1}{I}$$

*Note that the combination of points (3) and (7) imply that R is constrained from above and below, i.e.,

$$\frac{kT}{eI_L} \ll R \ll A\frac{kT}{eI_0}$$

8. Signal $= V_0 = I_L R$

Noise $= \sqrt{\delta V^2} = \sqrt{R^2 \delta I^2} = R\sqrt{2eI_L\Delta\nu}$

$$\frac{\text{Signal}}{\text{Noise}} = \sqrt{\frac{I_L}{2e\Delta\nu}}$$

9. $\Delta\nu \simeq f_0 \simeq \frac{1}{2\pi RC}$

In words, the attenuation in the feedback sets the bandwidth.

ID Number _____ **PART II** **Score** _____

PHYSICS DEPARTMENTAL EXAM -- FALL 2001

SECTION 1:

Problem 11: [Mathematics] Using a suitable contour integral, show that

$$\int_{-\infty}^{\infty} \frac{\cos(bx)}{x^2 + a^2} dx = \frac{\pi}{a} e^{-ab}$$

where a and b are real, positive numbers.

RAJ PATARIA

PROBLEM #11

Solutions

1. Since $I = \int_{-\infty}^{\infty} \frac{\cos(bx)}{x^2+a^2}\,dx = \mathrm{Re} \int_{-\infty}^{\infty} \frac{e^{ibx}}{x^2+a^2}\,dx$,

we consider the contour integral

$$I_C = \int_C \frac{e^{ibz}}{z^2+a^2}\,dz$$

along a contour as shown here, with R ultimately going to ∞.

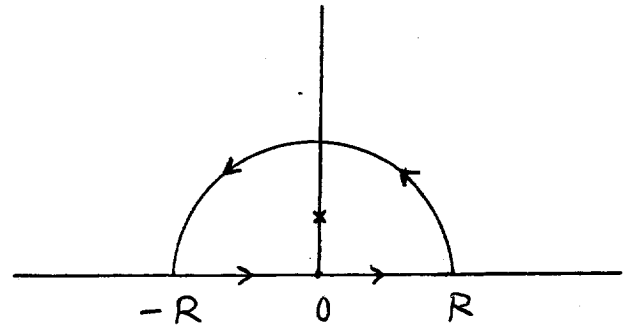

The integrand $f(z) = \frac{e^{ibz}}{z^2+a^2}$ is such that, as $R \to \infty$, the integral along the semi-circle vanishes.

[In view of the z^2 in denominator, Jordan's lemma need not be invoked]!

$\therefore$ In the limit $R \to \infty$, $I_C \longrightarrow \int_{-\infty}^{\infty} \frac{e^{ibx}}{x^2+a^2}\,dx$.

Now, $f(z)$ has two simple poles at $z = ia$ & $-ia$; only the former one counts — the relevant residue being $\left|\frac{e^{ibz}}{2z}\right|_{z=ia} = \frac{e^{-ab}}{2ia}$.

Thus, $I_C \to 2\pi i \cdot \frac{e^{-ab}}{2ia} = \frac{\pi}{a} e^{-ab}$.

Hence the result.

ID Number _____ PART II Score _____

PHYSICS DEPARTMENTAL EXAM -- FALL 2001

SECTION 1:

Problem 12: [Mathematics] Using a suitable contour integral, show that

$$\int_{-\infty}^{\infty} \frac{x^2 - x + 2}{x^4 + 10x^2 + 9}\, dx = \frac{5\pi}{12}$$

RAJ PATHRIA

PROBLEM # 12 2. The same contour as for 1, with $f(z) = \dfrac{z^2 - z + 2}{(z^2+1)(z^2+9)}$.

Once again, as $R \to \infty$, integral over the semi-circle vanishes and $I_C \longrightarrow$ the desired integral.

Now, we have 4 simple poles at $\pm i$ & $\pm 3i$.

The ones that count are:

$z = +i$, with residue $\left| \dfrac{z^2 - z + 2}{2z(z^2+9)} \right|_{z=+i} = \dfrac{1-i}{16i}$ &

$z = +3i$, with residue

$$\left| \frac{z^2 - z + 2}{(z^2+1)\, 2z} \right|_{z=+3i} = \frac{-7-3i}{-48i}.$$

The desired integral is, therefore, equal to

$$2\pi i \left[\frac{1-i}{16i} + \frac{7+3i}{48i} \right] = 2\pi i \, \frac{10}{48i}$$

$$= \frac{5\pi}{12}. \checkmark$$

ID Number _____ **PART II** **Score** _____

PHYSICS DEPARTMENTAL EXAM -- FALL 2001

SECTION 2:

Problem 13: [Classical Mechanics] A particle of charge e and mass m moves in a constant, uniform magnetic field **B**. Write down the Lagrangian, and find the conserved quantity corresponding to translation by **a**. (Note that a need not be parallel to **B**.) If you cannot do the more general problem, assume $\mathbf{B} = B\mathbf{z}$, pick a gauge, and find the generator for x, y, and z translation.

ANEESH MANOHAR

PROBLEM #13

A particle of charge e and mass m moves in a constant, uniform magnetic field $\vec{B}$. Write down the Lagrangian, and find the conserved quantity corresponding to translation by $\vec{a}$. (Note $\vec{a}$ need not be parallel to $\vec{B}$). If you cannot do this, assume $B = B_0 \hat{z}$, pick a gauge, and find the generators for x, y, z translations

soln: $$L = \frac{1}{2} m \dot{\vec{x}}^2 - \frac{e}{c} \dot{\vec{x}} \cdot \vec{A}(x)$$

$$x \to \vec{x} + \epsilon \vec{a}$$

$$\delta L = -\frac{e}{c} \dot{\vec{x}} \cdot \left[A(\vec{x} + \epsilon \vec{a}) - A(\vec{x}) \right]$$

$$= -\frac{e}{c} \dot{x}_i \frac{\partial A_i}{\partial x_j} \epsilon a_j$$

$$= -\frac{e}{c} \dot{x}_i \left(\frac{\partial A_i}{\partial x_j} - \frac{\partial A_j}{\partial x_i} + \frac{\partial A_j}{\partial x_i} \right) \epsilon a_j$$

$$\frac{\partial A_i}{\partial x_j} - \frac{\partial A_j}{\partial x_i} = -\epsilon_{ijk} B_k$$

$$\therefore \delta L = \epsilon \left[\frac{e}{c} \epsilon_{ijk} \dot{x}_i a_j B_k - \frac{e}{c} \dot{x}_i \frac{\partial A_j}{\partial x_i} a_j \right]$$

$$= \frac{\epsilon e}{c} \frac{d}{dt} \left[\epsilon_{ijk} x_i a_j B_k - A_j a_j \right] = \frac{dF}{dt}$$

since $\frac{\partial B}{\partial x} = 0$ $\frac{\partial B}{\partial t} = 0$.

conserved quantity: $\epsilon Q = \frac{\partial L}{\partial \dot{x}} \delta x - F$

$$\therefore Q = -\frac{e}{c} \left(\epsilon_{ijk} x_i a_j B_k - a_j A_j \right) + m\left(\dot{x}_i - \frac{e}{c} A_i\right) a_i$$

$$\therefore \vec{Q} = m \dot{\vec{x}} + \frac{e}{c} (\vec{x} \times \vec{B}) \quad \text{conserved}$$

ID Number _____ **PART II** **Score** _____

PHYSICS DEPARTMENTAL EXAM -- FALL 2001

SECTION 2:

PROBLEM 14: [Classical Mechanics] A particle moves along the curve

$$x = l(2\phi + \sin 2\phi) \text{ and } y = l(1 - \cos 2\phi)$$

in a uniform gravitational field in the negative y direction. Find the oscillation period using action angle variables. (Assume that the maximum value of $\phi < \pi / 2$.)

PROBLEM #14 | ANEESH MANOHAR

A particle moves along the curve

$$x = l\,(2\phi + \sin 2\phi) \qquad y = l\,(1-\cos 2\phi)$$

in a uniform gravitational field in the $-ve$ y direction. Find the oscillation period using action angle variables. [Assume that the maximum value of $\phi < \pi/2$]

soln:

$$T = \frac{1}{2} m(\dot{x}^2 + \dot{y}^2)$$

$$= \frac{1}{2} m l^2 \dot{\phi}^2 \left[(2 + 2\cos 2\phi)^2 + (2\sin 2\phi)^2\right]$$

$$= 2 m l^2 \dot{\phi}^2 \left[1 + 2\cos 2\phi + \cos^2 2\phi + \sin^2 2\phi\right]$$

$$= 8 m l^2 \dot{\phi}^2 \cos^2\phi$$

$$V = -mgy = -mgl\,(1-\cos 2\phi)$$

$$= -2mgl \sin^2\phi$$

$$\therefore\ L = 8 m l^2 \cos^2\phi\, \dot{\phi}^2 + 2mgl \sin^2\phi$$

$$P_\phi = \frac{\partial L}{\partial \dot{\phi}} = 16 m l^2 \cos^2\phi\, \dot{\phi}$$

$$H = \frac{P_\phi^2}{32 m l^2 \cos^2\phi} + 2mgl \sin^2\phi$$

$$\therefore\ P_\phi = \sqrt{32 m l^2 \cos^2\phi\,(H - 2mgl \sin^2\phi)}$$

$$= \pm \sqrt{32 m l^2}\, \cos\phi \sqrt{H - 2mgl \sin^2\phi}$$

$$J = \oint p\, dq = \oint P_\phi\, d\phi = 4 \int_0^{\phi_{max}} \sqrt{32 m l^2}\, \cos\phi \sqrt{H - 2mgl \sin^2\phi}$$

where $\sin^2\phi_{max} = H/(2mgl)$

let $\sin\phi = u$

$$J = 4\sqrt{32ml^2}\int_0^{\sqrt{H/2mgl}} \sqrt{H - 2mglu^2}\,du$$

$$= 4\sqrt{32ml^2}\cdot\left\{\frac{1}{2}u\sqrt{H-2mglu^2} + \frac{H}{2\sqrt{2mgl}}\sin^{-1}\sqrt{\frac{2mgl}{H}}\,u\right\}_0^{\sqrt{H/2mgl}}$$

$$= 4\sqrt{32ml^2}\cdot\left\{\cancel{\frac{1}{2}\sqrt{\frac{H}{2mgl}}\sqrt{H-2mgl\cdot\frac{H}{2mgl}}} + \frac{H}{2\sqrt{2mgl}}\cdot\frac{\pi}{2}\right.$$

$$J = \frac{\pi H}{4}\sqrt{\frac{l}{g}}$$

$$\tau = \frac{\partial J}{\partial H} = \frac{\pi}{4}\sqrt{\frac{l}{g}}$$

National® Brand
42-382 100 SHEETS EYE-EASE® 5 SQUARE
42-389 200 SHEETS EYE-EASE® 5 SQUARE
42-392 100 RECYCLED WHITE 5 SQUARE
42-399 200 RECYCLED WHITE 5 SQUARE
Made in U.S.A.

ID Number _____ PART II Score _____

PHYSICS DEPARTMENTAL EXAM – FALL 2001

SECTION 3:

PROBLEM 15: [Electrodynamics] The region of space with $z < 0$ is vacuum, while that with $z > 0$ is filled with a conductor of conductivity σ (which is large but finite) and permeability μ. The surface at $z = 0 - \varepsilon$ (i.e., just outside the conductor) is subjected to the magnetic field $\mathbf{H} \approx H_0 \cos(\omega t)\mathbf{x}$. The electric field at $z = 0 - \varepsilon$ is, of course, approximately normal to the conductor. The frequency ω is sufficiently small so that you can neglect the displacement current term $(\partial \mathbf{D} / \partial t = 0)$ in Maxwell's equations. Also, because of the finite conductivity, the currents in the conductor do not lie only on the surface.

a) Find the electric and magnetic fields for $z > 0$; and
b) Find the time averaged power per unit area flowing through the surface $z = z_0$ for arbitrary constant $z_0 > 0$.

① PROBLEM #15 $\nabla \times H = J + \underbrace{\frac{\partial D}{\partial t}}_{\approx 0}$ $\qquad \nabla \times E = -\frac{\partial B}{\partial t}$ $\qquad J = \sigma E$ in conductor

$$\nabla \times (\nabla \times H) = \nabla(\underbrace{\nabla \cdot H}_{0}) - \nabla^2 H = -\mu\sigma \frac{\partial H}{\partial t}$$

$$\vec{H} = \hat{x}\, \mathrm{Re}\left(h(z)\, e^{-i\omega t} \right) \qquad \text{B.C.: } h(z=0) = H_0$$

$$\left(\frac{d^2}{dz^2} + i\mu\sigma\omega \right) h(z) = 0 \quad \Rightarrow \quad h(z) = H_0\, e^{(-1+i)z/\delta}$$

$$\delta \equiv \sqrt{\frac{2}{\mu\sigma\omega}}$$

$$\vec{E} = \frac{1}{\sigma} \vec{\nabla} \times \vec{H} = \frac{\hat{y}}{\sigma} \frac{dH_x}{dz} = \hat{y}\, \mathrm{Re}\left(H_0 \frac{(-1+i)}{\delta\sigma} e^{(-1+i)z/\delta} \right)$$

Time ave. power/area through $z = z_0$ $= \hat{z} \cdot \langle \vec{S} \rangle \big|_{z_0}$

$$= \frac{1}{2\delta\sigma} \mathrm{Re}\left(H_0^2 (1-i)\, e^{-2z/\delta} \right) = \frac{H_0^2}{2\delta\sigma} e^{-2z/\delta}$$

KEN INTELLIGATOR

ID Number _____ **PART II** **Score** _____

PHYSICS DEPARTMENTAL EXAM -- FALL 2001

SECTION 3:

PROBLEM 16: [Electrodynamics] Consider scattering of an electromagnetic wave, of low frequency ω and electric field $\mathbf{E}_{inc}$, off of a small dielectric sphere of radius a; the sphere has $\mu = 1$ and permitivity e, and the rest of space is vacuum.

a) Find the induced dipole moment of the sphere;
b) Find the scattered $\mathbf{E}_{scat}$ and $\mathbf{H}_{scat}$ in the far (radiation) zone; and
c) Find the time-averaged power radiated per unit solid angle $dP/d\Omega$.

PROBLEM #16 (a) $\vec{p} = \frac{4}{3}\pi a^3 \vec{P} = \frac{4}{3}\pi a^3 (\varepsilon - \varepsilon_0)\vec{E}_{inside}$ KEN INTELLIGENTIAL

$$\Phi_{out} = \left(-E_0 r + \frac{A}{r^2}\right) P_1(\cos\theta)$$

$$\Phi_{in} = Br\, P_1(\cos\theta)$$

B.C. $\quad -E_0 a + \frac{A}{a^2} = Ba \,, \qquad \varepsilon\left(-E_0 - \frac{2A}{a^3}\right) = \varepsilon_0 B$

$$\Rightarrow \quad A = \left(\frac{\varepsilon/\varepsilon_0 - 1}{\varepsilon/\varepsilon_0 + 2}\right) E_0 a^3 \,, \quad B = -\frac{3E_0}{\varepsilon/\varepsilon_0 + 2} \quad \Rightarrow \vec{E}_{in} = -\nabla \Phi_{in}$$

$$\vec{E}_{in} = \frac{3}{\varepsilon/\varepsilon_0 + 2}\vec{E}_{inc} \quad \Rightarrow \quad \boxed{\vec{p} = 4\pi\varepsilon_0 a^3 \left(\frac{\varepsilon/\varepsilon_0 - 1}{\varepsilon/\varepsilon_0 + 2}\right)\vec{E}_{inc}}$$

(b) $\vec{A}(\vec{r},t) \approx \frac{\mu_0}{4\pi r}\dot{\vec{p}}(t - r/c)$

$$\vec{H}_{scat} = \frac{1}{4\pi r c}\ddot{\vec{p}} \times \hat{r} \,, \qquad \vec{E}_{scat} = \frac{1}{4\pi\varepsilon_0 r c^2}(\ddot{\vec{p}} \times \hat{r}) \times \hat{r}$$

$$\Rightarrow \vec{H}_{scat} \approx \frac{-\omega^2}{4\pi r c} e^{ikr}\, \vec{p} \times \hat{r}$$

$$\vec{E}_{scat} \approx \frac{-\omega^2 e^{ikr}}{4\pi\varepsilon_0 r c^2}(\vec{p} \times \hat{r}) \times \hat{r}$$

(c) $\frac{dP}{d\Omega} = \frac{r^2}{2}\hat{r}\, \mathrm{Re}\left(\vec{E}_{scat} \times \vec{H}^*_{scat}\right) = \frac{\omega^4}{32\pi^2\varepsilon_0 c^3}\left|(\hat{r} \times \vec{p}) \times \hat{r}\right|^2$

$$= \underbrace{\frac{\omega^4}{32\pi^2\varepsilon_0 c^3}}\, |\vec{p}|^2 \sin^2\theta$$

$$= \frac{c k^4}{32\pi^2\varepsilon_0} = \frac{c^2 k^4}{32\pi^2}\sqrt{\frac{\mu_0}{\varepsilon_0}}$$

PROBLEM #16 (a) $\vec{p} = \frac{4}{3}\pi a^3 \vec{P} = \frac{4}{3}\pi a^3 (\varepsilon - \varepsilon_0)\vec{E}_{inside}$ KEN INTELLIGATOR

$$\Phi_{out} = \left(-E_0 r + \frac{A}{r^2}\right) P_1(\cos\theta)$$

$$\Phi_{in} = Br\, P_1(\cos\theta)$$

B.C. $\quad -E_0 a + \frac{A}{a^2} = Ba \quad , \quad \varepsilon\left(-E_0 - \frac{2A}{a^3}\right) = \varepsilon_0 B$

$$\Rightarrow \quad A = \frac{\varepsilon/\varepsilon_0 - 1}{\varepsilon/\varepsilon_0 + 2} \quad , \quad B = -\frac{3}{\varepsilon/\varepsilon_0 + 2} \quad \Rightarrow \vec{E}_{in} = -\nabla\Phi_{in}$$

$$\vec{E}_{in} = \frac{3}{\varepsilon/\varepsilon_0 + 2}\vec{E}_{inc} \quad \Rightarrow \quad \boxed{\vec{p} = 4\pi\varepsilon a^3 \left(\frac{\varepsilon/\varepsilon_0 - 1}{\varepsilon/\varepsilon_0 + 2}\right)\vec{E}_{inc}}$$

(b) $\vec{A}(\vec{r},t) \approx \frac{\mu_0}{4\pi r}\dot{\vec{p}}(t - r/c)$

$$\vec{H}_{scat} = \frac{1}{4\pi r c}\ddot{\vec{p}} \times \hat{r} \quad , \quad \vec{E}_{scat} = \frac{1}{4\pi\varepsilon_0 r c^2}(\ddot{\vec{p}} \times \hat{r}) \times \hat{r}$$

$$\Rightarrow \vec{H}_{scat} \approx \frac{-\omega^2}{4\pi r c} e^{ikr}\, \vec{p} \times \hat{r}$$

$$\vec{E}_{scat} \approx \frac{-\omega^2 e^{ikr}}{4\pi\varepsilon_0 r c^2}(\vec{p} \times \hat{r}) \times \hat{r}$$

(c) $\frac{dP}{d\Omega} = \frac{r^2}{2}\hat{r}\, \mathrm{Re}\left(\vec{E}_{scat} \times \vec{H}^*_{scat}\right) = \frac{\omega^4}{32\pi^2\varepsilon_0 c^3}\left|(\hat{r} \times \vec{p}) \times \hat{r}\right|^2$

$$= \underbrace{\frac{\omega^4}{32\pi^2\varepsilon_0 c^3}}\, |\vec{p}|^2 \sin^2\theta$$

$$= \frac{c k^4}{32\pi^2\varepsilon_0} = \frac{c^2 k^4}{32\pi^2}\sqrt{\frac{\mu_0}{\varepsilon_0}}$$

ID Number _____ PART II Score _____

PHYSICS DEPARTMENTAL EXAM -- FALL 2001

SECTION 4:

Problem 17: [Quantum Mechanics] A spherically symmetric scattering potential is given by

$$V(r) = \begin{cases} V_0 > 0 & \text{if } r < r_0 \\ 0 & \text{if } r > r_0 \end{cases}$$

a) For low-energy scattering events, find the leading-order approximation to the *s*-wave phase shift; and
b) Find the leading-order approximation to the total scattering cross section in the low energy limit.

(You may need to know that

$$\nabla^2 = \frac{1}{r}\left(\frac{\partial^2}{\partial r^2} r\right) - \frac{L^2}{\hbar^2 r^2}$$

where **L** denotes the angular momentum operator.)

PROBLEM #17 LU SHAM

(a) s-wave : $l=0$

Let the wave function $\psi(r) = \frac{u(r)}{r}$

Then $u''(r) + \frac{2m}{\hbar^2}(E-V)u = 0$

where E is the energy, $E \ll V_0$.

For $r > r_0$, $u = \sin(kr+\delta_0)$

where $k = \sqrt{\frac{2m}{\hbar^2}E}$ δ_0 is the s-wave phase-shift

For $r < r_0$, $u = A\sinh(\kappa r)$

where $\kappa = \sqrt{\frac{2m}{\hbar^2}(V_0 - K)}$

$= k_0 - \frac{k^2}{2k_0}$, $k_0 = \sqrt{\frac{2m}{\hbar^2}V_0}$

Matching wave functions & derivatives at $r=r_0$:

$$A\sinh(\kappa r_0) = \sin(kr_0+\delta_0)$$

$$\kappa A\cosh(\kappa r_0) = k\cos(kr_0+\delta_0)$$

$$\therefore \frac{1}{\kappa}\tanh(\kappa r_0) = \frac{1}{k}\tan(kr_0+\delta_0)$$

Since $\delta_0 = O(k)$ for small k,

$$\tan(kr_0+\delta_0) \simeq kr_0 + \delta_0.$$

$$\therefore \delta_0 = +k\left[-r_0 + \frac{1}{k_0}\tanh(k_0 r_0)\right]$$

(b) Scattering length $a = -\delta_0/k = r_0 - \frac{\tanh(k_0 r_0)}{k_0 r_0}$

$$\sigma = \frac{4\pi}{k^2}|f_0|^2 = 4\pi a^2 = 4\pi\left[r_0 - \frac{\tanh(k_0 r_0)}{k_0 r_0}\right]^2$$

Solution #2
#17 Fuller

(a.)

$$i\hbar \frac{\partial \psi}{\partial t} = -\frac{\hbar^2}{2m} \nabla^2 \psi + V\psi$$

$$\psi = \frac{u(r)}{r}$$

$$E\psi = -\frac{\hbar^2}{2m} \frac{1}{r}\left(\frac{\partial^2}{\partial r^2} u\right) + \frac{L^2}{\hbar^2 r} u + V\frac{u}{r} = 0$$

$$Eu = -\frac{\hbar^2}{2m} u'' + \frac{L^2}{\hbar^2} u + Vu = 0$$

$$l = 0 \Rightarrow \boxed{u'' + \frac{2m}{\hbar^2}(E - V)u = 0}$$

where $E \ll V_0$

for $r > r_0$, $V \simeq 0$, $\Rightarrow u = \sin(kr + \delta_0)$

$\Rightarrow k = \sqrt{\frac{2mE}{\hbar^2}}$ $\quad \delta_0 =$ s-wave phase shift

for $r < r_0$ $\quad u = A\sinh(\kappa r)$

$$\kappa = \sqrt{\frac{2m}{\hbar^2}(V_0 - E)} = \sqrt{\frac{2m}{\hbar^2}V_0}\left\{\sqrt{1 - E/V_0}\right\}$$

$$= \kappa_0 - \kappa^2/2\kappa_0 \qquad \kappa_0 = \sqrt{\frac{2m}{\hbar^2}V_0}$$

$$\simeq \sqrt{\frac{2mV_0}{\hbar^2}}\left\{1 - \frac{1}{2}E/V_0\right\}$$

$$= \kappa_0 - \frac{k^2}{2\kappa_0}$$

@ $r = r_0$

$$A\sinh(\kappa r_0) = \sin(kr_0 + \delta_0)$$

$$\kappa A\cosh(\kappa r_0) = k\cos(kr_0 + \delta_0)$$

$$\therefore \frac{1}{\kappa}\tanh \kappa r_0 = \frac{1}{k}\tan(kr_0 + \delta_0)$$

since $\delta_0 \simeq \mathcal{O}(k)$ for small k

$$\tan(kr_0 + \delta_0) \simeq kr_0 + \delta_0$$

$$\therefore \delta_0 \simeq +k\left[-r_0 + \frac{1}{\kappa_0}\tanh(\kappa_0 r_0)\right]$$

$$\frac{1}{\kappa}\tanh \kappa r_0 = \frac{1}{\kappa_0}\tanh \kappa_0 r_0 \simeq r_0 + \frac{1}{k}\delta_0$$

$$\Rightarrow \delta_0 = +k\left[-r_0 + \frac{1}{\kappa_0}\tanh(\kappa_0 r_0)\right]$$

ID Number _____ **PART II** **Score** _____

PHYSICS DEPARTMENTAL EXAM -- FALL 2001

SECTION 4:

Problem 18: [Quantum Mechanics] Consider two nucleons in a nucleus. Regard the strong interaction as allowing the nucleons to be treated as nearly independent particles that can be characterized, among other things, as having "isospin", where isolated neutrons have isospin +1/2 and protons have –1/2. Assume that the residual Hamiltonian (left over after we ignore the strong interaction and consider a pure isospin piece) is spherically symmetric in the joint isospin space.

a) Write down an expression for the residual Hamiltonian and solve for all the energy eigenvalues and eigenfunctions;

b) The three nuclei ^{6}He, ^{6}Li, and ^{6}Be have approximately equal energy levels. ^{6}Li has another level about 2 MeV below the other nearly equal levels. Show how the Hamiltonian in part (a) can be used to explain the energy level structure of the three nuclei and to determine the parameter(s) in the Hamiltonian.

Solution

$$\therefore \quad H|jm\rangle = E_j|jm\rangle, \quad E_j = -\left(j(j+1) - \tfrac{3}{2}\right)\lambda$$

$j=0$, $\quad E_{j=0} = \frac{3}{2}\lambda$

$$|00\rangle = \frac{1}{\sqrt{2}}\left[|+-\rangle - |-+\rangle\right]$$

$j=1$, $\quad E_{j=1} = -\frac{1}{2}\lambda$

$$|11\rangle = |++\rangle$$

$$|10\rangle = \frac{1}{\sqrt{2}}\left[|+-\rangle + |-+\rangle\right]$$

$$|1\bar{1}\rangle = |--\rangle.$$

(b)

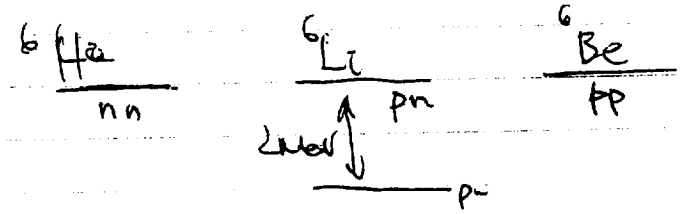

From the shell model, we take the 4 nucleon inner shell (^{4}He) to be inert. The properties of the 6 nucleon series are determined by the outer shell of 2 nucleons. The above Hamiltonian then yields the energy $-\frac{1}{2}\lambda$ for the higher level of three states.

If we identify $|+\rangle$ = proton state, $|-\rangle$ = neutron the 3 states of $j=1$ ($m=1,0,-1$) corresponds to ^{6}Be, ^{6}Li, ^{6}H. The singlet states correspond to lower ^{6}Li state. $\therefore -\lambda = 1$ MeV

ID Number _____ **PART II** **Score** _____

PHYSICS DEPARTMENTAL EXAM -- FALL 2001

SECTION 5:

Problem 19: [Relativistic Dynamics] Two infinite plates are at $x = 0$ and $x = d$. The plate at $x = d$ has voltage V relative to that at $x = 0$. There is also a constant magnetic field $\mathbf{B} = B_0\mathbf{z}$. An electron (of mass m) is emitted at zero initial velocity from the plate at $x = 0$, and the sign of V is such that the electron is attracted to the plate at $x = d$. Find the minimum voltage V such that the electron makes it to the plate at $x = d$ (rather than just cyclotron rotating between the plates). Treat this problem fully relativistically!

PROBLEM #19

$\phi = \frac{xV}{d}$, $\vec{A} = xB_0\hat{y}$ e.g.

KEW INTRILIGATOR

$$\hookrightarrow L = -mc^2\sqrt{1-\frac{\vec{v}^2}{c^2}} + \frac{q}{c}V_yB_0x - q\frac{xV}{d}$$

$$\frac{\partial L}{\partial t} = 0 \hookrightarrow \mathcal{H} = \text{const} = \gamma mc^2 - e\frac{xV}{d} = mc^2$$ since $v=0$ @ $x=0$

$$\frac{\partial L}{\partial y} = 0 \hookrightarrow P_y = \gamma mV_y - \frac{e}{c}B_0x = \text{const} = 0$$

$$\frac{\partial L}{\partial z} = 0 \hookrightarrow P_z = \gamma mV_z = \text{const} = 0$$

For V_{min} $V_x = 0$ @ $x=d$ + $\Rightarrow \gamma = \frac{1}{\sqrt{1-V_y^2/c^2}}$ @ $x=d$

$$\gamma V_y = e\frac{B_0d}{mc} \Rightarrow \beta\gamma = \frac{eB_0d}{mc^2} \longrightarrow \gamma^2-1 = \left(\frac{eB_0d}{mc^2}\right)^2$$

$$\hookrightarrow \gamma = \sqrt{1+\left(\frac{eB_0d}{mc^2}\right)^2}$$

So $\mathcal{H}$ cond $\Rightarrow$ $eV_{min} = mc^2(\gamma-1) \Rightarrow$

$$V_{min} = \frac{mc^2}{e}\left(\sqrt{1+\left(\frac{eB_0d}{mc^2}\right)^2}-1\right)$$

ID Number _____ PART II Score _____

PHYSICS DEPARTMENTAL EXAM -- FALL 2001

SECTION 5:

Problem 20: [Statistical Mechanics] A gas of nonrelativistic spin-1/2 fermions is confined by a parabolic trap described by the potential $V(\mathbf{r}) = \frac{1}{2} m\omega^2 \mathbf{r}^2$. Analyze this system at $T = 0$ using Thomas-Fermi theory.

a) Show that the system forms a droplet of finite radius a, i.e., show that the fermion density $n(\mathbf{r})$ vanishes for $r > a$. Find the density $n(\mathbf{r})$ in terms of the fermion mass m, the trap frequency ω, the droplet size a, and physical constants;

b) Find the total number of particles in the trap in terms of m, ω, a, and physical constants. If you get stuck with an integral you don't know how to do, make sure you at least dimensionalize it;

c) Holding the number of fermions constant, the trap frequency is doubled while T is maintained at zero. What happens to the drop radius?

PROBLEM #20.

DAN AROVAS

Solution

(a) We set

$$\mu = \frac{p_{\rm F}^2(\boldsymbol{r})}{2m} + \tfrac{1}{2}m\omega^2\boldsymbol{r}^2$$

and obtain a spherically symmetric solution

$$p_{\rm F}(r) = (m\omega a)\cdot\left(1-\frac{r^2}{a^2}\right)^{1/2}$$

with $\mu = \frac{1}{2}m\omega^2a^2$. Next find the density,

$$\begin{aligned} n(r) &= 2\int\frac{d^3p}{h^3}\,\Theta(p_{\rm F}(r)-p) \\ &= \frac{p_{\rm F}^3(r)}{3\pi^2\hbar^3} \\ &= \frac{1}{3\pi^2}\left(\frac{m\omega a}{\hbar}\right)^3\left(1-\frac{r^2}{a^2}\right)^{3/2} . \end{aligned}$$

(b) Now we integrate to get N:

$$\begin{aligned} N &= \int d^3r\, n(r) \\ &= \frac{4}{3\pi}\left(\frac{m\omega a^2}{\hbar}\right)^3\int_0^1 dx\, x^2\,(1-x^2)^{3/2} . \end{aligned}$$

The dimensionless integral (with $x \equiv r/a$) is easily performed using the trigonometric substitution $x \equiv \sin\theta$:

$$\begin{aligned} \mathcal{I} &\equiv \int_0^1 dx\, x^2\,(1-x^2)^{3/2} \\ &= \int_0^{\frac{\pi}{2}} d\theta\,(\cos^4\theta - \cos^6\theta) \\ &= \frac{\pi}{2}\cdot\left[\frac{1}{2^4}\binom{4}{2} - \frac{1}{2^6}\binom{6}{3}\right] \\ &= \frac{\pi}{32} . \end{aligned}$$

Hence, the equation of state is

$$N = \frac{1}{24}\left(\frac{m\omega a^2}{\hbar}\right)^3 .$$

(c) Keeping $dT = dN = 0$ we use the above equation of state and find $d(\omega a^2) = 0$. Thus if ω is doubled, the droplet size must decrease by a factor of $\sqrt{2}$.