INSTRUCTIONS
PART I : PHYSICS DEPARTMENT EXAM

Please take a few minutes to read through all problems before starting the exam. Ask the proctor if you are uncertain about the meaning of any part of any problem. You are to do seven (7) of the ten (10) problems.

The questions are grouped in five Sections. You must attempt at least one question from each of the five (5) Sections. (E.g. Section 1: one or both of problem 1 and problem 2.) Credit will be assigned for seven (7) questions only. **Circle the seven problems you wish to be graded:**

Section:	§1	§2	§3	§4	§5
Problems: (Circle your seven choices)	**1 2**	**3 4**	**5 6**	**7 8**	**9 10**

SPECIAL INSTRUCTIONS DURING EXAM

1. You should not have anything close to you other than your pens & pencils, calculator and food items. Please deposit your belongings (books, notes, backpacks, *etc.*) in a corner of the exam room.

2. Departmental examination paper is provided. Please make sure you:

   a. Write the problem number and your ID number on each sheet;

   b. Write only on one side of the paper;

   c. Start each problem on the attached examination sheets;

   d. If multiple sheets are used for a problem, please make sure you staple the sheets together and make sure your ID number is written on each of your exam sheets.

Colored scratch paper is provided and may be discarded when the examination is over. At the conclusion of the examination period, please staple sheets from each problem together. Submit this top sheet to one of the proctors, who will check that you have circled the correct problem numbers above. Then submit your completed exam, separated into stacks according to problem number.

#1 : UNDERGRADUATE CLASSICAL MECHANICS

`PROBLEM:` A rectangular plate of dimensions $a \times b$ moves at relativistic velocity $\boldsymbol{V} = V\hat{\boldsymbol{x}}$ as shown in fig. 1. In the rest frame of the rectangle, the a side makes an angle θ with respect to the $\hat{\boldsymbol{x}}$ axis.

Describe in detail and sketch the shape of the plate as measured by an observer in the laboratory frame. Indicate the lengths of all sides and the values of all interior angles. Evaluate your expressions for the case $\theta = \frac{1}{4}\pi$ and $V = \sqrt{\frac{2}{3}}\, c$.

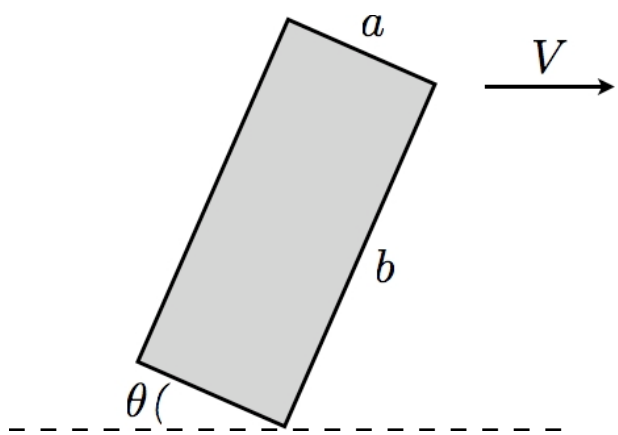

Figure 1: A rectangular plate moving at velocity $\boldsymbol{V} = V\,\hat{\boldsymbol{x}}$.

`SOLUTION:` An observer in the laboratory frame will measure lengths parallel to $\hat{\boldsymbol{x}}$ to be Lorentz contracted by a factor γ^{-1}, where $\gamma = (1-\beta^2)^{-1/2}$ and $\beta = V/c$. Lengths perpendicular to $\hat{\boldsymbol{x}}$ remain unaffected. Thus, we have the situation depicted in fig. **??**. Simple trigonometry then says

$$\tan\phi = \gamma\tan\theta \quad , \quad \tan\tilde{\phi} = \gamma^{-1}\tan\theta \ ,$$

as well as

$$a' = a\sqrt{\gamma^{-2}\cos^2\!\theta + \sin^2\!\theta} = a\sqrt{1-\beta^2\cos^2\!\theta}$$
$$b' = b\sqrt{\gamma^{-2}\sin^2\!\theta + \cos^2\!\theta} = b\sqrt{1-\beta^2\sin^2\!\theta} \ .$$

The plate deforms to a parallelogram, with internal angles

$$\chi = \tfrac{1}{2}\pi + \tan^{-1}(\gamma\tan\theta) - \tan^{-1}(\gamma^{-1}\tan\theta)$$
$$\tilde{\chi} = \tfrac{1}{2}\pi - \tan^{-1}(\gamma\tan\theta) + \tan^{-1}(\gamma^{-1}\tan\theta) \ .$$

Note that the area of the plate as measured in the laboratory frame is

$$\begin{aligned}\Omega' &= a'\,b'\,\sin\chi = a'\,b'\,\cos(\phi-\tilde{\phi})\\ &= \gamma^{-1}\,\Omega\ ,\end{aligned}$$

where $\Omega = ab$ is the proper area. The area contraction factor is γ^{-1} and not γ^{-2} (or γ^{-3} in a three-dimensional system) because only the parallel dimension gets contracted.

Setting $V = \sqrt{\frac{2}{3}}\,c$ gives $\gamma = \sqrt{3}$, and with $\theta = \frac{1}{4}\pi$ we have $\phi = \frac{1}{3}\pi$ and $\tilde{\phi} = \frac{1}{6}\pi$. The interior angles are then $\chi = \frac{2}{3}\pi$ and $\tilde{\chi} = \frac{1}{3}\pi$. The side lengths are $a' = \sqrt{\frac{2}{3}}\,a$ and $b' = \sqrt{\frac{2}{3}}\,b$.

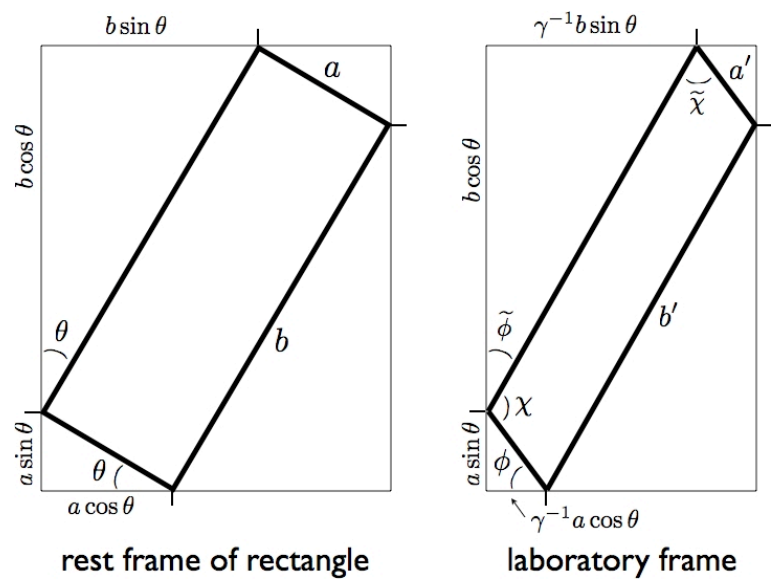

Figure 2: Relativistic deformation of the rectangular plate.

#2 : UNDERGRADUATE CLASSICAL MECHANICS

`PROBLEM:` An inextensible massless string of length ℓ passes through a hole in a horizontal table. A point mass m_1 on one end of the string moves frictionlessly along the table (*i.e.* with two degrees of freedom), and another point mass m_2 dangles vertically from the other end. (See the sketch below.)

`(a)` Write the Lagrangian for this system.

`(b)` Under what conditions will the hanging mass remain stationary?

`(c)` Starting from the situation in part `(b)`, the hanging mass is pulled down slightly and then released. State clearly what is conserved during this process.

`(d)` Compute the subsequent motion of the hanging mass.

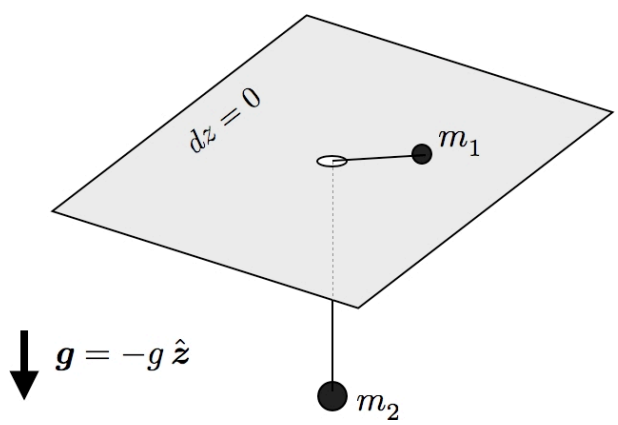

Figure 3: Two masses connected by an inextensible string.

`SOLUTION:`

`(a)` Let the length of string on the table be r and the length hanging below be y. The mass m_1 is described by the polar coordinates (r, ϕ). The fixed length constraint is $y + r = \ell$. The Lagrangian is

$$\begin{aligned} L &= \tfrac{1}{2}m_1\big(\dot{r}^2 + r^2\dot{\phi}^2\big) + \tfrac{1}{2}m_2\dot{y}^2 + m_2 g y \\ &= \tfrac{1}{2}(m_1 + m_2)\dot{r}^2 + \tfrac{1}{2}m_1 r^2\dot{\phi}^2 + m_2 g(\ell - r)\ . \end{aligned}$$

`(b)` The angular momentum is conserved: $\dot{p}_\phi = 0$, with

$$p_\phi = \frac{\partial L}{\partial \dot{\phi}} = m_1 r^2 \dot{\phi} \ .$$

The equation of motion for r yields

$$\begin{aligned}(m_1 + m_2)\ddot{r} &= m_1 r \dot{\phi}^2 - m_2 g \\ &= \frac{p_\phi^2}{m_1 r^3} - m_2\, g \equiv -\frac{\partial U_{\text{eff}}}{\partial r} \ ,\end{aligned}$$

where the effective potential is

$$U_{\text{eff}} = \frac{p_\phi^2}{2 m_1 r^2} + m_2 g r \ .$$

The condition for stationary m_2 is $\dot{r} = \ddot{r} = 0$, which requires $U'_{\text{eff}}(r) = 0$. This, in turn, has the solution $r = a$, with

$$a = \left(\frac{p_\phi^2}{m_1 m_2\, g} \right)^{1/3} \ .$$

`(c)` The tension in the string along the table is radial, hence there are no torques, and p_ϕ is conserved.

`(d)` We write $r = a + \eta$ and expand the equation of motion:

$$(m_1 + m_2)\, \ddot{\eta} = -U''_{\text{eff}}(a)\, \eta + \mathcal{O}(\eta^2) \ .$$

The solution is

$$\eta(t) = \eta_0 \cos\big(\omega t + \delta\big) \ ,$$

where the oscillation frequency is

$$\omega = \sqrt{\frac{U''_{\text{eff}}(a)}{m_1 + m_2}} = \sqrt{\frac{3 m_2\, g}{(m_1 + m_2) a}} \ .$$

#3 : UNDERGRADUATE ELECTROMAGNETISM

`PROBLEM:` An electric field $\boldsymbol{E} = E_0\,\hat{\boldsymbol{x}}\,e^{-i\omega t}$ is applied at the interface of a vacuum ($z > 0$) and a conductor ($z < 0$) of conductivity σ. (The conductor is nonmagnetic, *i.e.* $\mu = 1$.)

`(a)` For $\sigma \gg \omega$, calculate how deeply the electric field penetrates into the conductor. (*I.e.* calculate the depth at which the electric field has decreased to $1/e$ of its amplitude at the surface.)

`(b)` Calculate the power dissipated per unit area of the conductor.

`SOLUTION:`

`(a)` The Maxwell-Ampère law gives

$$\boldsymbol{\nabla} \times \boldsymbol{B} = \frac{4\pi}{c}\,\boldsymbol{j} + \frac{1}{c}\,\frac{\partial \boldsymbol{E}}{\partial t} \ .$$

With $\boldsymbol{j} = \sigma \boldsymbol{E}$, and with $\sigma \gg \omega$, we may drop the second term on the RHS. Taking the time derivative and invoking Faraday's law then gives

$$\begin{aligned}\frac{\partial}{\partial t}\,\boldsymbol{\nabla} \times \boldsymbol{E} &\approx \frac{4\pi\sigma}{c}\,\frac{\partial \boldsymbol{E}}{\partial t} \\ &= -c\boldsymbol{\nabla} \times \boldsymbol{\nabla} \times \boldsymbol{E} \\ &= c\boldsymbol{\nabla}(\boldsymbol{\nabla} \cdot \boldsymbol{E}) - \nabla^2 \boldsymbol{E} \ ,\end{aligned}$$

whence Gauss's law results in

$$\nabla^2 \boldsymbol{E} = \frac{4\pi\sigma}{c^2}\,\frac{\partial \boldsymbol{E}}{\partial t} \ .$$

Thus, we have

$$\frac{\partial^2 E_x}{\partial z^2} + \frac{4\pi i\sigma\omega}{c^2}\,E_x = 0 \ .$$

The solution is of the form

$$E_x(z,t) = A\,e^{i(kz-\omega t)} + B\,e^{-i(kz+\omega t)}$$

where

$$k^2 = \frac{4\pi i\sigma\omega}{c^2} \quad \Longrightarrow \quad k = (1+i)\,\frac{\sqrt{2\pi\sigma\omega}}{c}$$

Since $\mathrm{Im}(k) > 0$, we must set $B = 0$ to have a valid solution at $z \to \infty$, in which case $A = E_0$. The penetration depth of the electric field is then

$$\ell = \frac{1}{\mathrm{Re}(k)} = \frac{c}{\sqrt{2\pi\sigma\omega}} \ .$$

(b) The power dissipated per unit area is

$$\frac{P}{A} = \tfrac{1}{2}\sigma \int_0^\infty dz \left|E(z,t)\right|^2$$
$$= \frac{\sigma E_0^2}{2\,\mathrm{Re}(k)} = \sqrt{\frac{\sigma c^2}{8\pi\omega}}\, E_0^2 \ .$$

#4 : UNDERGRADUATE ELECTROMAGNETISM

`PROBLEM:` What is the effective total cross section for the scattering of a linearly polarized electromagnetic wave by a classical particle of mass m and charge q vibrating under the influence of a spring of spring constant k? Assume that the particle is free to move in three dimensional space, *i.e.* mechanically it is an isotropic three-dimensional classical harmonic oscillator.

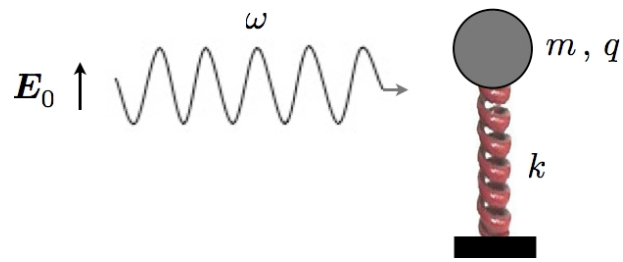

Figure 4: Scattering of an electromagnetic wave by a charged harmonic oscillator.

`SOLUTION:` The equation of motion for the particle is

$$\ddot{\boldsymbol{r}} + \omega_0^2\, \boldsymbol{r} = \frac{q\boldsymbol{E}_0}{m}\, \cos(\omega t)\ ,$$

where $\omega_0 = \sqrt{k/m}$. The classical dipole moment of the charge is then

$$\boldsymbol{d}(t) = q\, \boldsymbol{r}(t) = \frac{q^2\, \boldsymbol{E}_0}{m(\omega_0^2 - \omega^2)}\, \cos(\omega t)\ .$$

Now, the differential scattering cross section is given by

$$\frac{d\sigma}{d\Omega} = \frac{1}{S_{\rm inc}} \cdot \frac{dP}{d\Omega}\ ,$$

where

$$S_{\rm inc} = \frac{c}{4\pi}\, \left|\boldsymbol{E}_0\right|^2$$

is the incident intensity and

$$\frac{dP}{d\Omega} = \frac{\ddot{\boldsymbol{d}}^2}{4\pi c^3}\, \sin^2\theta$$

is the dipole radiation's differential power emission, where θ is the angle between $\boldsymbol{E}_0$ and the emitted ratiation. Thus,

$$\frac{d\sigma}{d\Omega} = \left(\frac{q^2}{mc^2}\right)^2 \frac{\omega^4 \sin^2\theta}{(\omega_0^2 - \omega^2)^2} \ ,$$

Integrating over solid angle, we find the total cross section

$$\sigma = \frac{8\pi}{3}\left(\frac{q^2}{mc^2}\right)^2 \frac{\omega^4}{(\omega_0^2 - \omega^2)^2} \ .$$

#5 : UNDERGRADUATE QUANTUM MECHANICS

`PROBLEM:` Because of possibility of quantum tunneling, a hydrogen atom can be ionized even by a weak electric field $\mathcal{E} \ll 1$. (Here we work in atomic units: $\hbar = e = m = 1$.) Derive a formula for the ionization rate from the ground state of the atom. Use the WKB approximation and employ the smallness of $\mathcal{E}$ to simplify the calculation. Ignore any pre-exponential factors.

`SOLUTION:` In the ground state the electron has energy $E_0 = -1/2$ (we use atomic units throughout). The ionization occurs when this electron tunnels under the energy barrier made from the electrostatic potentials of the proton and the external field

$$U(r) = -\frac{1}{r} - \mathcal{E}\, r\,.$$

The tunneling region corresponds to $U(r) > E$. For weak electric fields $\mathcal{E}$ this is equivalent to $r < r_{\max} \simeq (2\mathcal{E})^{-1}$. At points r not too close to the proton, $r \sim r_{\max}$, the first term in the potential is negligible; therefore, the barrier has an approximately triangular shape:

$$U(r) \simeq -\mathcal{E}\, r\,.$$

The corresponding WKB action S is given by

$$S = \int\limits_0^{r_{\max}} \sqrt{2[U(r) - E_0]}\, dr \simeq \int\limits_0^{r_{\max}} \sqrt{1 - 2\mathcal{E}\, r}\; dr = \frac{1}{3\mathcal{E}}\,.$$

Hence, to the leading order, the ionization rate is

$$e^{-2S} = e^{-2/3\mathcal{E}}\;.$$

This simplified derivation misses a prefactor with dimension of frequency, which ultimately provides the correct units.

#6 : UNDERGRADUATE QUANTUM MECHANICS

`PROBLEM:` Compute $\langle\psi_0|x^4|\psi_0\rangle$ in the ground state of the one-dimensional harmonic oscillator Hamiltonian

$$H = \frac{p^2}{2m} + \tfrac{1}{2}m\omega^2 x^2 \ .$$

`SOLUTION:`

It is convenient to reconstruct the ladder operators for the harmonic oscillator. We write

$$a = \frac{x}{\ell} + \frac{i\ell p}{2\hbar} \ ,$$

with arbitrary ℓ. This satisfies $\big[a, a^\dagger\big] = 1$, by construction. We furthermore have that

$$a^\dagger a + \tfrac{1}{2} = \frac{x^2}{\ell^2} + \frac{\ell^2 p^2}{4\hbar^2} \ .$$

Comparing with H, we equate the ratios of the coefficients of x^2 and p^2, resulting in $\ell = \sqrt{2\hbar/m\omega}$. The position operator is given by

$$x = \tfrac{1}{2}\ell\big(a + a^\dagger\big) \ .$$

We therefore must calculate

$$\langle\psi_0|x^4|\psi_0\rangle = \frac{\ell^4}{16}\,\langle 0|\big(a + a^\dagger\big)^4|0\rangle$$

The operator $\big(a + a^\dagger\big)^4$, when expanded, has $2^4 = 16$ terms. However, only two of these will yield any finite expectation value in the ground state $|0\rangle$. Clearly the only terms which survive must have an a on the left, so as not to annihilate $\langle 0|$, and an $a^\dagger$ on the right, so as not to annihilate $|0\rangle$. Furthermore, the number of creation $\big(a^\dagger\big)$ operators must be the same as the number of annihilation (a) operators. This leaves

$$\begin{aligned}\langle\psi_0|x^4|\psi_0\rangle &= \frac{\ell^4}{16}\,\langle 0|\,a\,a\,a^\dagger a^\dagger + a\,a^\dagger a\,a^\dagger\,|0\rangle \\ &= \frac{3\ell^4}{16} = \frac{3\hbar^2}{4m^2\omega^2} \ .\end{aligned}$$

#7 : UNDERGRADUATE STATISTICAL MECHANICS

PROBLEM:

(a) The internal energy of a black body radiator is $E(V,T) = aVT^4$. Find the entropy $S(V,T)$.

Next, consider a Carnot engine with 'black body radiation' as its working substance. To start with the state of the radiation is defined by its volume V_0, and its temperature T_0. (This fixed the pressure p_0 through an equation of state.) The radiation is now subjected to

(i) an isothermal expansion from $V = V_0$ to $V = 2V_0$

(ii) an adiabatic expansion from $V = 2V_0$ to $V = 4V_0$

(iii) an isothermal compression from $V = 4V_0$ to $V = 2V_0$

(iv) an adiabatic compression from $V = 2V_0$ to $V = V_0$.

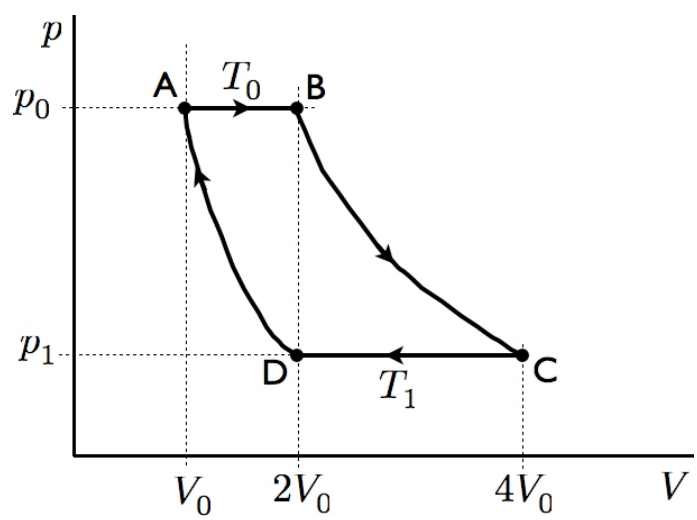

Figure 5: The black body Carnot cycle.

(b) Determine the net work performed per cycle, expressed in terms of the product $p_0 V_0$.

(c) What is the efficiency of this cycle?

`SOLUTION:`

`(a)` We have

$$\begin{aligned} dE &= aT^4\,dV + 4aV\,T^3\,dT \\ &= \left[T\left(\frac{\partial S}{\partial V}\right)_T - p\right]dV + T\left(\frac{\partial S}{\partial T}\right)_V dT \end{aligned}$$

Invoking a Maxwell relation, we have

$$T\left(\frac{\partial p}{\partial T}\right)_V - p = aT^4 \ ,$$

the solution of which is $p(T) = \frac{1}{3}aT^4$. Integrating $dS = T^{-1}dE + T^{-1}p\,dV$, we then obtain

$$S(V,T) = \tfrac{4}{3}\,aVT^3 \ .$$

`(b)` Note that we can write $S = 4pV/T$. To compute the work done per cycle, we can compute the net heat absorbed, since $\Delta E_{\text{cycle}} = 0$. Since the processes BC and DA are adiabatic, we have $Q_{\text{BC}} = Q_{\text{DA}} = 0$. Therefore,

$$\begin{aligned} Q_{\text{cycle}} &= Q_{\text{AB}} + Q_{\text{CD}} \\ &= 4p_0(\Delta V)_{\text{AB}} + 4p_1(\Delta V)_{\text{CD}} \\ &= 4p_0V_0 - 8p_1V_0 \ . \end{aligned}$$

We need to know p_1. This is determined by adiabaticity. First we find T_1:

$$V_{\text{A}}\,T_0^3 = V_{\text{D}}\,T_1^3 \quad\Longrightarrow\quad T_1 = 2^{-1/3}\,T_0 \ .$$

Next, since $p \propto T^4$, we have $p_1 = 2^{-4/3}\,p_0$. Thus,

$$\begin{aligned} W_{\text{cycle}} &= 4(p_0 - 2p_1)\,V_0 \\ &= 4\big(1 - 2^{-1/3}\big)\,p_0V_0 \ . \end{aligned}$$

`(c)` The efficiency is

$$\eta = \frac{W_{\text{cycle}}}{Q_{\text{AB}}} = 1 - 2^{-1/3} = 20.6\%$$

#8 : UNDERGRADUATE STATISTICAL MECHANICS

`PROBLEM:` Consider a three-dimensional simple harmonic oscillator, with Hamiltonian

$$H = \frac{\boldsymbol{p}^2}{2m} + \tfrac{1}{2} m\omega^2 \boldsymbol{r}^2 \ .$$

`(a)` Compute the (1-particle) classical partition function.

`(b)` Compute the (1-particle) quantum partition function.

`SOLUTION:`

`(a)` The classical 1-particle partition function is

$$\begin{aligned}
\zeta_{\rm CL} &= \int \frac{d^3p\, d^3r}{h^3}\ e^{-\left(\frac{\boldsymbol{p}^2}{2m} + \frac{1}{2} m\omega^2 \boldsymbol{r}^2\right)/k_{\rm B}T} \\
&= h^{-3} \left(\int\limits_{-\infty}^{\infty} dx\ e^{-m\omega^2 x^2/2k_{\rm B}T} \right)^3 \left(\int\limits_{-\infty}^{\infty} dp\ e^{-p^2/2mk_{\rm B}T} \right)^3 \\
&= h^{-3} \left(\frac{2\pi k_{\rm B}T}{m\omega^2} \right)^{3/2} \left(2\pi m k_{\rm B}T \right)^{3/2} \\
&= \left(\frac{k_{\rm B}T}{\hbar\omega} \right)^3 \ .
\end{aligned}$$

`(b)` The quantum mechanical energy levels are given by

$$E(n_1, n_2, n_3) = \left(n_1 + n_2 + n_3 + \tfrac{3}{2} \right) \hbar\omega \ .$$

Thus, the 1-particle partition function is

$$\begin{aligned}
\zeta_{\rm QM} &= \sum_{n_1=0}^{\infty} \sum_{n_2=0}^{\infty} \sum_{n_3=0}^{\infty} e^{-E(n_1,n_2,n_3)/k_{\rm B}T} \\
&= \left(\sum_{n=0}^{\infty} e^{-(n+\frac{1}{2})\hbar\omega/k_{\rm B}T} \right)^3 \\
&= \left(\frac{e^{-\hbar\omega/2k_{\rm B}T}}{1 - e^{-\hbar\omega/k_{\rm B}T}} \right)^3 \ .
\end{aligned}$$

Note that, for $T \gg \hbar\omega/k_{\rm B}$, one has $\exp(-\hbar\omega/k_{\rm B}T) \approx 1 - (\hbar\omega/k_{\rm B}T)$, and thus the ratio $\zeta_{\rm CL}/\zeta_{\rm QM} \to 1$.

#9 : UNDERGRADUATE PHYSICAL ESTIMATES

`PROBLEM:` Velocity of surface (capillary) waves v is normally much smaller than the sound velocity c in water. For example, for the wavelength of $\lambda = 1\,\mathrm{cm}$ we have $v \sim 10^{-4}c$. On the other hand, both surface tension σ and bulk compressibility B of water have the same physical origin: short-range intermolecular forces. Show that the smallness of the v/c ratio is related to small average distance a between water molecules. Estimate a by following these steps:

`(a)` Use scaling and dimensional analysis to derive how v depends on wavelength λ and physical parameters of water.

`SOLUTION:` As for any other waves, the capillary wave velocity is determined by the competition of the restoring force (provided here by the surface tension) and the inertia (characterized by mass density ρ). Surface tension has units $[\sigma] = (\text{energy})/(\text{length})^2$ and ρ has units $[\rho] = (\text{mass})/(\text{length})^3$. There is only one combination of these two quantities and the wavelength that has the units of velocity:

$$v(\lambda) \sim \sqrt{\sigma/(\lambda\rho)}\,.$$

`(b)` Do the same for c.

`SOLUTION:` From undergraduate physics

$$c = \sqrt{B/\rho}\,.$$

This formula can also be derived from scaling analysis, taking into account that the compressibility has units $[B] = (\text{energy})/(\text{length})^3$.

`(c)` Get the desired estimate of a using the data given above.

`SOLUTION:` Based on the dimensions of σ and B, we expect

$$\sigma \sim Ba\,,$$

where a is the distance between the molecules. Combined with the formulas above, this entails

$$a \sim \lambda\left(\tfrac{v}{c}\right)^2 \sim 10^{-8}\,\mathrm{cm}\,.$$

#10 : UNDERGRADUATE MATHEMATICAL PHYSICS

`PROBLEM:` Compute the Fourier transform of the three-dimensional Yukawa potential,

$$V(\boldsymbol{x}) = \frac{e^{-m|\boldsymbol{x}|}}{|\boldsymbol{x}|} \ .$$

`SOLUTION:` The integral is most conveniently done in polar coordinates. We then have

$$\begin{aligned}
\hat{V}(\boldsymbol{k}) &= \int d^3x \ \frac{e^{-m|\boldsymbol{x}|}}{|\boldsymbol{x}|} \ e^{-i\boldsymbol{k}\cdot\boldsymbol{x}} \\
&= \int\limits_0^\infty dr \, r^2 \int\limits_0^\pi d\theta \ \sin\theta \int\limits_0^{2\pi} d\phi \ \frac{e^{-(mr+ikr\cos\theta)}}{r} \\
&= \frac{2\pi}{ik}\left[\frac{1}{m-ik} - \frac{1}{m+ik}\right] \\
&= \frac{4\pi}{m^2+\boldsymbol{k}^2} \ .
\end{aligned}$$

INSTRUCTIONS
PART II : PHYSICS DEPARTMENT EXAM

Please take a few minutes to read through all problems before starting the exam. Ask the proctor if you are uncertain about the meaning of any part of any problem. You are to do seven (7) of the ten (10) problems.

The questions are grouped in five Sections. You must attempt at least one question from each of the five (5) Sections. (E.g. Section 1: one or both of problem 1 and problem 2.) Credit will be assigned for seven (7) questions only. **Circle the seven problems you wish to be graded:**

Section:	§1	§2	§3	§4	§5
Problems: (Circle your seven choices)	**11 12**	**13 14**	**15 16**	**17 18**	**19 20**

SPECIAL INSTRUCTIONS DURING EXAM

1. You should not have anything close to you other than your pens & pencils, calculator and food items. Please deposit your belongings (books, notes, backpacks, *etc.*) in a corner of the exam room.
2. Departmental examination paper is provided. Please make sure you:
   a. Write the problem number and your ID number on each sheet;
   b. Write only on one side of the paper;
   c. Start each problem on the attached examination sheets;
   d. If multiple sheets are used for a problem, please make sure you staple the sheets together and make sure your ID number is written on each of your exam sheets.

Colored scratch paper is provided and may be discarded when the examination is over. At the conclusion of the examination period, please staple sheets from each problem together. Submit this top sheet to one of the proctors, who will check that you have circled the correct problem numbers above. Then submit your completed exam, separated into stacks according to problem number.

#11 : GRADUATE CLASSICAL MECHANICS

`PROBLEM:` Consider a one-dimensional oscillator with the time-dependent Hamiltonian

$$H = \frac{p^2}{2m} + a(t)\, x^4 \ .$$

If the time-varying parameter $a(t)$ is slowly increased (compared to the frequency of oscillation) to twice its initial (positive) value, by what multiplicative factors do the energy and oscillation frequency vary from their initial values?

`SOLUTION:` The oscillator action J is an adiabatic invariant. With $H = E$, we have

$$J = \frac{1}{2\pi} \oint p\, dx = \frac{1}{2\pi} \times 4 \int\limits_0^{(E/a)^{1/4}} dx\, \sqrt{2m\big(E - a\, x^4\big)}$$

$$= C\, m^{1/2}\, E^{3/4}\, a^{-1/4} \ ,$$

where C is given by

$$C = \frac{\sqrt{8}}{\pi} \int\limits_0^1 dx\, \sqrt{1 - x^4}$$

$$= \sqrt{\frac{2}{\pi}}\, \frac{\Gamma\big(\frac{5}{4}\big)}{\Gamma\big(\frac{7}{4}\big)} \approx 0.786894 \ .$$

(The numerical evaluation of C was not required.) Adiabatic invariance thus implies

$$J \propto \frac{E^{3/4}}{a^{1/4}} = \text{constant} \qquad \Rightarrow \qquad E(J, a) \propto J^{4/3}\, a^{1/3}$$

Thus, $E(2a_0) = 2^{1/3}\, E(a_0)$ and the energy increases by a factor $2^{1/3}$.

The frequency is given by

$$\omega(J, a) = \frac{\partial E}{\partial J} \propto J^{1/3}\, a^{1/3} \ ,$$

hence, $\omega(2a_0) = 2^{1/3}\, \omega(a_0)$, and the oscillation frequency also increases by a factor $2^{1/3}$.

#12 : GRADUATE CLASSICAL MECHANICS

`PROBLEM:` Consider a one-dimensional string of length L, uniform tension τ, and uniform mass density μ suspended between fixed ends. You may neglect gravity. The motion of the string is confined to a plane and is described by the height function $y(x,t)$.

`(a)` Derive the *exact* equation for the transverse motion of the string. You may *not* assume that y' is small.

`(b)` Assume now that $\big|y'\big| \ll 1$. A bead with mass m is affixed to the string at position $x = a$. Derive the equations of motion for the string and the bead.

`SOLUTION:`

`(a)` The Lagrangian density is

$$\mathcal{L} = \tfrac{1}{2}\mu\left(\frac{\partial y}{\partial t}\right)^2 - \tau\left[\sqrt{1+\left(\frac{\partial y}{\partial x}\right)^2} - 1\right] \ .$$

The Euler-Lagrange equations are

$$\frac{\partial \mathcal{L}}{\partial y} = \frac{\partial}{\partial t}\left(\frac{\partial \mathcal{L}}{\partial \dot{y}}\right) + \frac{\partial}{\partial x}\left(\frac{\partial \mathcal{L}}{\partial y'}\right) \ .$$

Thus,

$$\mu\,\ddot{y} = \tau\,\frac{\partial}{\partial x}\left(\frac{y'}{\sqrt{1+y'^{\,2}}}\right) = \frac{\tau\,y''}{\big(1+y'^{\,2}\big)^{3/2}} \ .$$

`(b)` The equations of motion may be derived by taking the mass density to be $\mu + m\delta(x-a)$. One arrives at two equations. The first is for the string for $x \neq a$, the small oscillations of which are governed by

$$\mu\,\ddot{y} = \tau\,y'' \ .$$

The second equation is Newton's 2nd law for the mass m:

$$m\,\ddot{y}(a,t) = \tau\Big(y'(a^+,t) - y'(a^-,t)\Big) \ .$$

We also have the boundary conditions $y(0,t) = y(L,t) = 0$.

Incidentally, we can solve the equations of motion using d'Alembert's method (this was not required of you). With $y(0,t) = y(L,t) = 0$, we have

$$\begin{aligned} 0 \le x < a \ : \ \ y(x,t) &= f(ct - x) - f(ct + x) \\ a < x \le L \ : \ \ y(x,t) &= g(ct - x + L) - g(ct + x - L) \ . \end{aligned}$$

Invoking continuity at $x = a$ and Newton's 2$^{\rm nd}$ law for the mass yields

$$\begin{aligned} f(ct - a) - f(ct + a) &= g(ct - a + L) - g(ct + a - L) \\ mc^2 \Big[f''(ct - a) - f''(ct + a) \Big] &= \tau \Big[f'(ct - a) + f'(ct + a) \\ &\qquad - g'(ct - a + L) - g'(ct + a - L) \Big] \ , \end{aligned}$$

or, with $\xi \equiv x - ct$,

$$\begin{aligned} f(\xi) - f(\xi + 2a) &= g(\xi + L) - g(\xi + 2a - L) \\ f'(\xi) - f'(\xi + 2a) &= \frac{\mu}{m} \Big[f(\xi) + f(\xi + 2a) - g(\xi + L) - g(\xi + 2a - L) \Big] \ . \end{aligned}$$

Writing

$$f(\xi) = \sum_k \hat{f}(k) \, e^{ik\xi} \ ,$$

our coupled equations become

$$\begin{aligned} \sin(ka) \, \hat{f}(k) &= - \sin(kL - ka) \, \hat{g}(k) \\ k\ell \, \sin(ka) \, \hat{f}(k) &= \cos(ka) \, \hat{f}(k) - \cos(kL - ka) \, \hat{g}(k) \ , \end{aligned}$$

where $\ell \equiv m/\mu$. We then have,

$$\hat{g}(k) = - \frac{\sin(ka)}{\sin(kL - ka)} \, \hat{f}(k) \ .$$

and we obtain the following equation for k:

$$\cot(ka) + \cot(kL - ka) = k\ell \ ,$$

This determines the allowed values of k in the Fourier decomposition of $f(\xi)$. When $m = 0$, we have $kL = n\pi$, which recapitulates Bernoulli's solution.

#13 : GRADUATE ELECTROMAGNETISM

`PROBLEM:` Consider a uniaxial crystal with dielectric tensor

$$\varepsilon_{\alpha\beta} = \varepsilon_\perp \big(\delta_{\alpha\beta} - n_\alpha\, n_\beta\big) + \varepsilon_\parallel\, n_\alpha\, n_\beta \ ,$$

where $\hat{\boldsymbol{n}}$ is the optical axis of the crystal. Find and solve the dispersion equations for electromagnetic waves in the uniaxial crystal. You may assume the magnetic permeability is isotropic, with $\mu = 1$.

Hint : You may find it convenient to choose $\hat{\boldsymbol{z}} = \hat{\boldsymbol{n}}$, in which case

$$\varepsilon_{\alpha\beta} = \begin{pmatrix} \varepsilon_\perp & 0 & 0 \\ 0 & \varepsilon_\perp & 0 \\ 0 & 0 & \varepsilon_\parallel \end{pmatrix} \ .$$

Then decompose $\boldsymbol{k}$ and $\boldsymbol{E}$ as

$$\boldsymbol{k} = k_x\, \hat{\boldsymbol{x}} + k_z\, \hat{\boldsymbol{z}} \qquad , \qquad \boldsymbol{E} = E_x\, \hat{\boldsymbol{x}} + E_z\, \hat{\boldsymbol{z}} \ .$$

`SOLUTION:`

We write $\boldsymbol{E}(\boldsymbol{x},t) = \boldsymbol{E}\, e^{i(\boldsymbol{k}\cdot\boldsymbol{x}-\omega t)}$ and $\boldsymbol{B}(\boldsymbol{x},t) = \boldsymbol{B}\, e^{i(\boldsymbol{k}\cdot\boldsymbol{x}-\omega t)}$. It is convenient to express the vectors $\boldsymbol{k}$ and $\boldsymbol{E}$ in terms of components parallel to and perpendicular to the symmetry axis $\hat{\boldsymbol{n}}$. Thus, we write

$$k_\alpha = k_\parallel\, n_\alpha + k_{\perp,\alpha}$$
$$E_\alpha = E_\parallel\, n_\alpha + E_{\perp,\alpha} \ ,$$

where $\hat{\boldsymbol{n}} \cdot \boldsymbol{k}_\perp = \hat{\boldsymbol{n}} \cdot \boldsymbol{E}_\perp = 0$. Maxwell's equations, with no sources, may be written as

$$k_\alpha\, \varepsilon_{\alpha\beta}\, E_\beta = 0 \qquad\qquad \epsilon_{\alpha\beta\gamma}\, k_\beta\, E_\gamma = \frac{\omega}{c}\, B_\alpha$$
$$k_\alpha\, B_\alpha = 0 \qquad\qquad \epsilon_{\alpha\beta\gamma}\, k_\beta\, B_\gamma = -\frac{\omega}{c}\, \varepsilon_{\alpha\beta}\, E_\beta \ .$$

In terms of the components $k_\parallel$, $\boldsymbol{k}_\perp$, $E_\parallel$, and $\boldsymbol{E}_\perp$, Gauss's law says

$$\varepsilon_\parallel\, k_\parallel\, E_\parallel + \varepsilon_\perp\, \boldsymbol{k}_\perp \cdot \boldsymbol{E}_\perp = 0 \ .$$

Taking the curl of Faraday's law and invoking the Maxwell-Ampère law, we have

$$\left(\boldsymbol{k}^2\, \delta_{\alpha\beta} - k_\alpha\, k_\beta - \frac{\omega^2}{c^2}\, \varepsilon_{\alpha\beta}\right) E_\beta = 0 \ .$$

Expressed in terms of the components $k_\parallel$, $\boldsymbol{k}_\perp$, $E_\parallel$, and $\boldsymbol{E}_\perp$, these equations may be written in the form

$$\boldsymbol{k}^2\, E_\parallel - \left(k_\parallel\, E_\parallel + \boldsymbol{k}_\perp \cdot \boldsymbol{E}_\perp\right) k_\parallel - \frac{\omega^2}{c^2}\, \varepsilon_\parallel\, E_\parallel = 0$$
$$\boldsymbol{k}^2\, \boldsymbol{E}_\perp - \left(k_\parallel\, E_\parallel + \boldsymbol{k}_\perp \cdot \boldsymbol{E}_\perp\right) \boldsymbol{k}_\perp - \frac{\omega^2}{c^2}\, \varepsilon_\perp\, \boldsymbol{E}_\perp = 0\ .$$

Invoking our earlier result from Gauss's law, we can eliminate $\boldsymbol{k}_\perp \cdot \boldsymbol{E}_\perp$, and express the first of these equations as

$$\boldsymbol{k}^2\, E_\parallel - \left(1 - \frac{\varepsilon_\parallel}{\varepsilon_\perp}\right) k_\parallel^2\, E_\parallel - \frac{\omega^2}{c^2}\, \varepsilon_\parallel\, E_\parallel = 0\ ,$$

which yields the dispersion

$$\frac{\omega^2}{c^2} = \varepsilon_\parallel^{-1}\, \boldsymbol{k}_\perp^2 + \varepsilon_\perp^{-1}\, k_\parallel^2\ .$$

(Had we used the second of the equations, for the components perpendicular to $\hat{\boldsymbol{n}}$, we'd have obtained the same expression.)

#14 : GRADUATE ELECTROMAGNETISM

`PROBLEM:` Consider an infinite sheet extending over the (y, z) plane. Charge is uniformly distributed on this sheet, with surface charge density σ.

`(a)` An observer moves in a trajectory $\boldsymbol{x}(t) = (x_0\,,\,0\,,\,vt)$. Calculate the electromagnetic fields in the rest frame of this observer by computing the 4-current density vector in this frame, and then solving Maxwell's equations for this source.

`(b)` Compute the fields by another method, *i.e.* invoking the relativistic transformation of $\boldsymbol{E}$ and $\boldsymbol{B}$ fields.

`SOLUTION:`

`(a)` Recall the Lorentz boost of 4-vectors:

$$\begin{aligned} x'^{\,0} &= \gamma\, x^0 - \gamma\beta\, x_\parallel \\ x'_\parallel &= -\gamma\beta\, x^0 + \gamma\, x_\parallel \\ \boldsymbol{x}'_\perp &= \boldsymbol{x}_\perp \ , \end{aligned}$$

where frame K' moves with velocity $c\boldsymbol{\beta}$ with respect to K, where $\gamma = (1-\beta^2)^{-1/2}$, and where

$$x_\parallel = \hat{\boldsymbol{\beta}} \cdot \boldsymbol{x} \quad , \quad \boldsymbol{x}_\perp = \boldsymbol{x} - x_\parallel\, \hat{\boldsymbol{\beta}}$$

are the components of $\boldsymbol{x}$ parallel to and perpendicular to $\hat{\boldsymbol{\beta}}$, respectively. (For the inverse boost, from K' to K, simply reverse the sign of β.)

For our problem, K is the laboratory frame, in which the charged sheet is at rest, and K' is the frame of the observer, with $\hat{\boldsymbol{\beta}} = \hat{\boldsymbol{z}}$. The current density 4-vector in frame K is clearly $j^\mu = (c\sigma\delta(x)\,,\,\mathbf{0})$. Thus, in the K' frame, we have

$$c\rho' = \gamma c\sigma\,\delta(x') \quad , \quad j'_z = -\gamma\beta c\sigma\,\delta(x') \quad , \quad j'_x = j'_y = 0 \ .$$

Note that $x = x'$ because the $\hat{\boldsymbol{x}}$ direction is orthogonal to $\boldsymbol{\beta}$. Thus, in frame K' the surface charge density is $\gamma\sigma$, and hence the electric field measured by the observer is

$$\boldsymbol{E}'(\boldsymbol{x}') = 2\pi\gamma\sigma\,\hat{\boldsymbol{x}} \ .$$

The Maxwell-Ampère law tells us

$$\boldsymbol{\nabla}' \times \boldsymbol{B}' = \frac{4\pi}{c}\,\boldsymbol{j}' \ ,$$

from which we have

$$\frac{\partial B'_y}{\partial x'} - \frac{\partial B'_x}{\partial y'} = -4\pi\gamma\beta\,\delta(x') \ ,$$

the solution of which is

$$B'_y = -2\pi\gamma\beta\sigma\,\mathrm{sgn}(x') \ ,$$

hence the observer measures $B'_y = -2\pi\gamma\beta\sigma$.

`(b)` Alternatively, one can compute the fields in the laboratory frame K and transform them into the frame of the observer K'. The transformation rules for fields are

$$\begin{aligned} E'_\parallel &= E_\parallel \qquad , \qquad \boldsymbol{E}'_\perp = \gamma\big(\boldsymbol{E}_\perp + \boldsymbol{\beta}\times\boldsymbol{B}_\perp\big) \\ B'_\parallel &= B_\parallel \qquad , \qquad \boldsymbol{B}'_\perp = \gamma\big(\boldsymbol{B}_\perp - \boldsymbol{\beta}\times\boldsymbol{E}_\perp\big) \ . \end{aligned}$$

Now in the K frame, clearly we have $\boldsymbol{E} = 2\pi\sigma\,\mathrm{sgn}(x)\,\hat{\boldsymbol{x}}$ and $\boldsymbol{B} = 0$. From the above transformation formulae, we then obtain

$$\boldsymbol{E}' = 2\pi\gamma\sigma\,\mathrm{sgn}(x')\,\hat{\boldsymbol{x}} \quad , \quad \boldsymbol{B}' = -2\pi\gamma\beta\sigma\,\mathrm{sgn}(x')\,\hat{\boldsymbol{y}} \ ,$$

which agrees with the result from part `(a)`.

#15 : GRADUATE QUANTUM MECHANICS

`PROBLEM:` Given an attractive Yukawa potential,

$$V(\boldsymbol{r}) = -V_0 \, \frac{e^{-r/a}}{r/a} \ ,$$

write a variational $l = 0$ state

$$\psi(\boldsymbol{r}) = C \, e^{-\kappa r} \ ,$$

where κ is the variational parameter.

`(a)` What is the value of the normalization constant C?

`(b)` What is the trial energy $E(\kappa)$ for a particle of mass m?

`(c)` What is the condition on κ which optimizes the variational energy?

`(d)` For what values of a does this procedure yield a bound state?

`SOLUTION:`

`(a)` We write

$$\int d^3r \, \big|\psi(\boldsymbol{r})\big|^2 = 4\pi |C|^2 \int\limits_0^\infty dr \, r^2 \, e^{-2\kappa r} = \frac{\pi |C|^2}{\kappa^3} = 1 \ .$$

Thus,

$$C = \frac{\kappa^{3/2}}{\sqrt{\pi}} \ .$$

`(b)` The trial energy is

$$\begin{aligned} E &= \int d^3r \left\{ \frac{\hbar^2}{2m} \, \big|\boldsymbol{\nabla}\psi(\boldsymbol{r})\big|^2 + V(\boldsymbol{r}) \, \big|\psi(\boldsymbol{r})\big|^2 \right\} \\ &= \frac{\kappa^3}{\pi} \cdot 4\pi \int\limits_0^\infty dr \, r^2 \left\{ \frac{\hbar^2}{2m} \, \kappa^2 \, e^{-2\kappa r} - V_0 \, \frac{e^{-r/a}}{r/a} \, e^{-2\kappa r} \right\} \\ &= \frac{\hbar^2 \kappa^2}{2m} - \frac{4 V_0 \, \kappa^3 a^3}{(1 + 2\kappa a)^2} \ . \end{aligned}$$

`(c)` We can simplify the notation a bit if we define the dimensionless parameter $\lambda \equiv 2\kappa a$. Then

$$E(\lambda) = \tfrac{1}{2}\left(T_0\,\lambda^2 - V_0\,\frac{\lambda^3}{(\lambda+1)^2}\right) ,$$

where

$$T_0 \equiv \frac{\hbar^2}{4ma^2} .$$

Differentiating with respect to λ then yields

$$\frac{\partial E}{\partial \lambda} = T_0\,\lambda - \tfrac{1}{2}V_0\,\frac{\lambda^2\,(\lambda+3)}{(\lambda+1)^3} .$$

Setting $\partial E/\partial\lambda = 0$ then yields

$$\frac{\hbar^2}{2ma^2\,V_0} = \frac{\lambda\,(\lambda+3)}{(\lambda+1)^3} .$$

`(d)` If we plug the result from `(c)` into the equation for $E(\lambda)$, we find

$$E_0 = -\tfrac{1}{4}V_0\,\frac{\lambda^3\,(\lambda-1)}{(\lambda+1)^3} .$$

Thus, there is a bound state (*i.e.* $E_0 < 0$) for $\lambda > 1$, which means

$$a > \frac{\hbar}{mV_0} .$$

#16 : GRADUATE QUANTUM MECHANICS

`PROBLEM:` The harmonic oscillator coherent state $\big|z\big\rangle$ is an eigenstate of the annihilation operator, with $a\big|z\big\rangle = z\big|z\big\rangle$, and z a complex number.

`(a)` Find an explicit representation for $\big|z\big\rangle$ in terms of occupation number eigenstates $\big|n\big\rangle$.

`(b)` Compute the overlap $\big\langle w\big|z\big\rangle$ of two coherent states.

`SOLUTION:`

`(a)` We write

$$\big|z\big\rangle = \sum_{n=0}^{\infty} C_n \big|n\big\rangle \ ,$$

whence $a\big|z\big\rangle = z\big|z\big\rangle$ entails

$$\sqrt{n+1}\, C_{n+1} = z\, C_n \quad \Longrightarrow \quad C_n = \frac{z^n}{\sqrt{n!}}\, C_0 \ .$$

Normalization then demands

$$\big\langle z\big|z\big\rangle = |C_0|^2 \sum_{n=0}^{\infty} \frac{(\bar{z}z)^n}{n!} = |C_0|^2\, e^{\bar{z}z} = 1 \ .$$

Thus, $C_0 = \exp\big(-\tfrac{1}{2}\bar{z}z\big)$ and

$$\big|z\big\rangle = e^{-\frac{1}{2}\bar{z}z} \sum_{n=0}^{\infty} \frac{z^n}{\sqrt{n!}}\, \big|n\big\rangle \ .$$

`(b)` From the above definition of $\big|z\big\rangle$, we have

$$\begin{aligned}
\big\langle w\big|z\big\rangle &= e^{-\frac{1}{2}\bar{z}z}\, e^{-\frac{1}{2}\bar{w}w} \sum_{m=0}^{\infty}\sum_{n=0}^{\infty} \frac{\bar{w}^m\, z^n}{\sqrt{m!\, n!}}\, \big\langle m\big|n\big\rangle \\
&= e^{-\frac{1}{2}\bar{z}z}\, e^{-\frac{1}{2}\bar{w}w} \sum_{n=0}^{\infty} \frac{(\bar{w}\, z)^n}{n!} \\
&= e^{-\frac{1}{2}\bar{w}w}\, e^{-\frac{1}{2}\bar{z}z}\, e^{\bar{w}z} \ .
\end{aligned}$$

#17 : GRADUATE STATISTICAL MECHANICS

`PROBLEM:` A surface containing M adsorption sites is in equilibrium with a monatomic ideal gas. Atoms adsorbed on the surface have an energy $-\Delta$ and no kinetic energy. Each adsorption site can accommodate at most one atom. Calculate the fraction f of occupied adsorption sites as a function of the gas density n, the temperature T, the binding energy Δ, and physical constants.

Hint : The single particle partition function for the nonrelativistic ideal gas is $\zeta = V\lambda_T^{-3}$, where λ_T is the thermal wavelength.

`SOLUTION:` The grand partition function for the surface is

$$\Xi_{\rm s} = e^{-\Omega_{\rm s}/k_{\rm B}T} = \left(1 + e^{-\Delta/k_{\rm B}T}\, e^{\mu/k_{\rm B}T}\right)^M \ .$$

The fraction of occupied sites is

$$f = \frac{\langle N_{\rm s}\rangle}{M} = -\frac{k_{\rm B}T}{M}\,\frac{\partial\Omega_{\rm s}}{\partial\mu} = \frac{e^{\mu/k_{\rm B}T}}{e^{\mu/k_{\rm B}T} + e^{\Delta/k_{\rm B}T}} \ .$$

Since the surface is in equilibrium with the gas, its fugacity $z = \exp(\mu/k_{\rm B}T)$ and temperature T are the same as in the gas.

For a monatomic ideal gas, the single particle partition function is $\zeta = V\lambda_T^{-3}$, where $\lambda_T = \sqrt{2\pi\hbar^2/mk_{\rm B}T}$ is the thermal wavelength. Thus, the grand partition function, for indistinguishable particles, is

$$\begin{aligned}\Xi_{\rm g} &= \sum_{N_{\rm g}=0}^{\infty} \frac{e^{N_{\rm g}\mu/k_{\rm B}T}}{N_{\rm g}!}\left(V\lambda_T^{-3}\right)^{N_{\rm g}} \\ &= \exp\left(V\lambda_T^{-3}\, e^{\mu/k_{\rm B}T}\right) \ .\end{aligned}$$

The gas density is

$$n = \frac{\langle N_{\rm g}\rangle}{V} = -\frac{k_{\rm B}T}{V}\,\frac{\partial\Omega_{\rm g}}{\partial\mu} = \lambda_T^{-3}\, e^{\mu/k_{\rm B}T} \ .$$

Thus, the fugacity of both the gas and the surface is given by $z = n\lambda_T^3$, and

$$f = \frac{n\lambda_T^3}{n\lambda_T^3 + \exp(\Delta/k_{\rm B}T)} \ .$$

#18 : GRADUATE STATISTICAL MECHANICS

`PROBLEM:` The bosonic low-energy excitations of a two-dimensional system of dimensions $L \times L$ are described by the wave equation

$$\rho \, \frac{\partial^2 u}{\partial t^2} + C \, \nabla^4 u = 0$$

where $\nabla^4 = (\nabla^2)^2$. (The scalar $u(\boldsymbol{r}, t)$ might represent height fluctuations normal to the two-dimensional plane.)

`(a)` Solve for the dispersion relation $\omega(\boldsymbol{k})$.

`(b)` Compute the density of states $g(\omega)$.

`(c)` Compute, to within a numerical constant, the low-temperature specific heat $C(T)$. You may assume that $k_{\rm B}T$ is much greater than the spacing between neighboring quantized energy levels.

`SOLUTION: (a)` The wave equation is

$$\rho \, \frac{\partial^2 u}{\partial t^2} + C \, \nabla^4 u = 0$$

so substituting $u(\boldsymbol{r}, t) = u_0 \, e^{i(\boldsymbol{k}\cdot\boldsymbol{r} - \omega t)}$ gives $-\rho \, \omega^2 + C k^4 = 0$, *i.e.*

$$\omega = \sqrt{\frac{C}{\rho}} \, k^2$$

where $k = |\boldsymbol{k}|$.

`(b)` The density of states is given by

$$g(\omega) \, d\omega = \frac{L^2}{4\pi^2} \, 2\pi k \, dk = \frac{L^2}{4\pi} \sqrt{\frac{\rho}{C}} \, d\omega$$

which gives

$$g(\omega) = \frac{L^2}{4\pi} \sqrt{\frac{\rho}{C}} \; ,$$

a constant.

`(c)` The mean energy is

$$E(T) = \int\limits_0^\infty d\omega \, g(\omega) \, \hbar\omega \left\{ n(\omega) + \tfrac{1}{2} \right\}$$

where $n(\omega) = (e^{\hbar\omega/k_{\rm B}T} - 1)^{-1}$ is the Bose occupancy factor. Note that $E(T)$ is infinite! This is because of the zero point energy. (If we had imposed an ultraviolet (short wavelength) cutoff on the density of states, as in the Debye model, this wouldn't have happened.) However, the infinite zero point energy is temperature independent and doesn't affect the specific heat. The T-dependent part to $E(T)$ is

$$\begin{aligned} E(T) - E_0 &= \frac{L^2}{4\pi}\sqrt{\frac{\rho}{C}}\int\limits_0^\infty d\omega\,\frac{\hbar\omega}{e^{\hbar\omega/k_{\rm B}T}-1} \\ &= \frac{L^2}{4\pi}\sqrt{\frac{\rho}{C}}\,\frac{(k_{\rm B}T)^2}{\hbar}\int\limits_0^\infty dx\,\frac{x}{e^x-1} \\ &= \frac{\pi^2}{6}\,\frac{L^2}{4\pi}\sqrt{\frac{\rho}{C}}\,\frac{(k_{\rm B}T)^2}{\hbar}\ , \end{aligned}$$

where the integral gives the numerical constant $\frac{1}{6}\pi^2$. The specific heat is then linear in T:

$$C(T) = \frac{\partial E}{\partial T} = \frac{\pi^2}{6}\,\frac{L^2}{4\pi}\sqrt{\frac{\rho}{C}}\,\frac{2k_{\rm B}^2 T}{\hbar} = \frac{\pi k_{\rm B}^2\,T}{12\,\hbar}\sqrt{\frac{\rho}{C}}\,L^2$$

#19 : GRADUATE MATHEMATICAL PHYSICS

`PROBLEM:` Find the leading-order asymptotic behavior of the integral

$$I(k) = \int_{-\infty}^{\infty} dx \, \frac{e^{ikx}}{\sqrt{x^2+1}} \ ,$$

for $k \gg 1$. Express both the exponential and the pre-exponential terms in terms of elementary functions.

`SOLUTION:` Viewing $x = u + iv$ as a complex variable, $I(x)$ is a contour integral running along the real axis. We can analytically continue the integrand into the upper half-plane of x by introducing a branch cut along the line $(i, +i\infty)$. Assuming $k > 0$ and using the Jordan lemma, the contour can then be deformed to wrap around the cut, leading to

$$I(k) = 2\int_{1}^{\infty} dv \, \frac{e^{-kv}}{\sqrt{v^2-1}} \ ,$$

For $k \gg 1$ the exponential rapidly decays; therefore, the leading-order asymptotic behavior can be determined expanding the new integrand near the lower limit, $v = 1$:

$$I(k) \simeq \sqrt{2} \int_{1}^{\infty} dv \frac{e^{-kv}}{\sqrt{v-1}} \ .$$

Changing the variable to $z = (v-1)k$, we get

$$I(k) \simeq \sqrt{\frac{2}{k}} \, e^{-k} \int_{0}^{\infty} dz \, \frac{e^{-z}}{\sqrt{z}} = \sqrt{\frac{2}{k}} \, e^{-k} \, \Gamma\big(\tfrac{1}{2}\big) = \sqrt{\frac{2\pi}{k}} \ e^{-k} \, ,$$

where $\Gamma(z)$ is the Gamma function. Finally, since the original intergal is even in k, we can write

$$I(k) \simeq \sqrt{\frac{2\pi}{|k|}} \ e^{-|k|} \, , \quad k \gg 1 \, .$$

Note : The full expression may be written as $I(k) = 2K_0\big(|k|\big)$, where $K_0(z)$ is the Bessel function of imaginary argument.

#20 : GRADUATE MATHEMATICAL PHYSICS

`PROBLEM:` Consider an infinite square lattice resistor network, as depicted in fig. 1. Each individual link resistance is R.

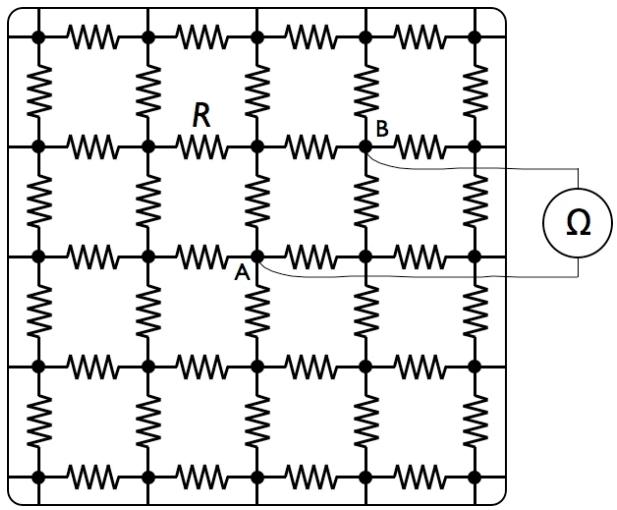

Figure 1: A section of an infinite square resistor lattice network. The link resistance is R. An ohmmeter measures the resistance $R_{\rm AB}$.

`(a)` Let the voltage at lattice point (m, n) be denoted by $V_{m,n}$, and let any *external* current flowing into (m, n) be denoted by $I_{m,n}$ (*i.e.* the current injected in or drawn out of a note by the ohmmeter). Show that Kirchoff's laws demand

$$4V_{m,n} - V_{m-1,n} - V_{m+1,n} - V_{m,n-1} - V_{m,n+1} = I_{m,n}\, R \ .$$

`(b)` An ohmmeter is then brought into measure the resistance between the points $\mathrm{A} = (0, 0)$ and $\mathrm{B} = (1, 1)$ on the opposite corners of a square. Find an expression for $R_{\rm AB}$.

Hint : Kirchoff's laws may be more tractable in Fourier space. For any

lattice variable $Q_{m,n}$, we define the direct and inverse Fourier transforms as

$$\hat{Q}(k_x, k_y) = \sum_{m,n} Q_{m,n}\, e^{-ik_x m}\, e^{-ik_y n}$$
$$Q_{m,n} = \int_{-\pi}^{\pi} \frac{dk_x}{2\pi} \int_{-\pi}^{\pi} \frac{dk_y}{2\pi}\, \hat{Q}(k_x, k_y)\, e^{ik_x m}\, e^{ik_y n} \ .$$

Your expression for $R_{\rm AB}$ may involve an integral (or double integral), which you do not need to evaluate.

`SOLUTION:`

`(a)` The current along any link is the voltage drop across that link, divided by the link resistance. Thus, the current flowing from site (m, n) to site $(m-1, n)$ is $\big(V_{m,n} - V_{m-1,n}\big)/R$. Current conservation demands that the current $I_{m,n}$ injected at (m, n) must be equal to the sum of all the link currents flowing out from (m, n). Thus,

$$4V_{m,n} - V_{m-1,n} - V_{m+1,n} - V_{m,n-1} - V_{m,n+1} = I_{m,n}\, R \ .$$

`(b)` The ohmmeter injects a current I_0 at site $(0, 0)$ and extracts it at site $(1, 1)$. Thus, the external current is given by

$$I_{m,n} = I_0 \left(\delta_{m,0}\, \delta_{n,0} - \delta_{m,1}\, \delta_{n,1}\right) \ .$$

Thus,

$$\hat{V}(\boldsymbol{k}) = \frac{I_0\, R \left(1 - e^{-ik_x}\, e^{-ik_y}\right)}{4 - 2\cos k_x - 2\cos k_y} \ ,$$

and

$$R_{\rm AB} = \frac{V_{0,0} - V_{1,1}}{I_0}$$
$$= R \int_{-\pi}^{\pi} \frac{dk_x}{2\pi} \int_{-\pi}^{\pi} \frac{dk_y}{2\pi}\, \frac{1 - \cos(k_x + k_y)}{2 - \cos k_x - \cos k_y} \ .$$

This was as far as you needed to go, however, it is possible to evaluate the integral. We start by writing $\cos(k_x + k_y) = \cos k_x \cos k_y + \sin k_x \sin k_y$ in

the numerator, and then throw out the sine term, since it is odd in each of $k_{x,y}$ while the denominator is even. Then we can write

$$\frac{1-\cos k_x \cos k_y}{2-\cos k_x - \cos k_y} = \frac{(1-\cos k_x)^2}{2-\cos k_x - \cos k_y} + \cos k_x \ .$$

The second term on the RHS above can be dropped. Making use of

$$\int_{-\pi}^{\pi} \frac{d\theta}{a - b\cos\theta} = \frac{\Theta(a-b)}{\sqrt{a^2-b^2}}$$

(for a, b positive), we are left with the integral

$$\begin{aligned} \frac{R_{\rm AB}}{R} &= \int_{-\pi}^{\pi} \frac{d\theta}{2\pi} \frac{(1-\cos\theta)^2}{\sqrt{(2-\cos\theta)^2-1}} \\ &= \frac{1}{\pi}\int_0^2 ds \, \frac{s}{\sqrt{4-s^2}} = \frac{2}{\pi} \ , \end{aligned}$$

where we substituted $s = 1-\cos\theta$. Thus,

$$R_{\rm AB} = \frac{2R}{\pi} \ .$$

So you can use an (infinite) resistor network to measure π (!).